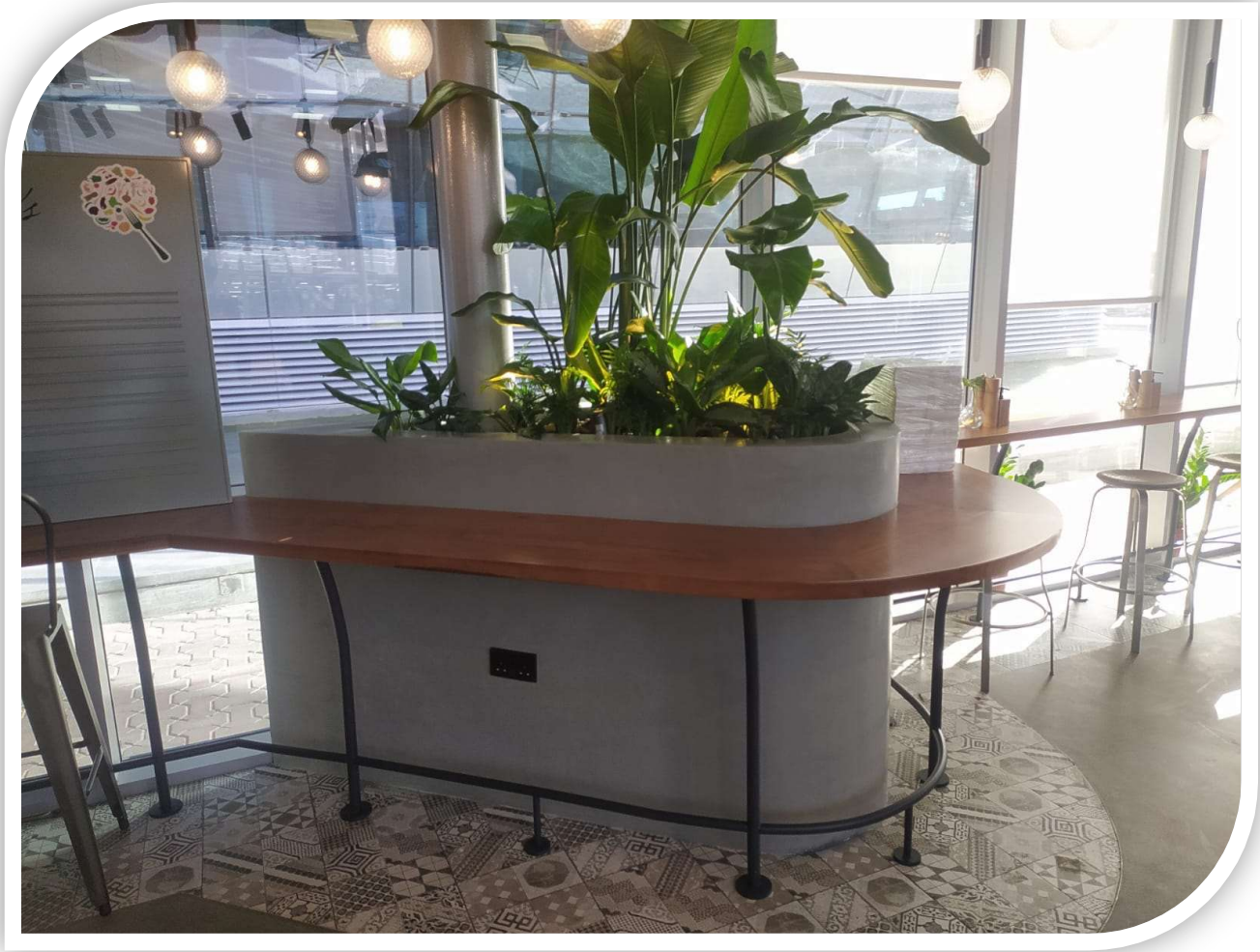

PQ DOCUMENTS

Revoren Group Brochure

Functional Plan

Commercial License

VAT certificate

Revoren Executed / Current Projects Project Approvals

REVOREN

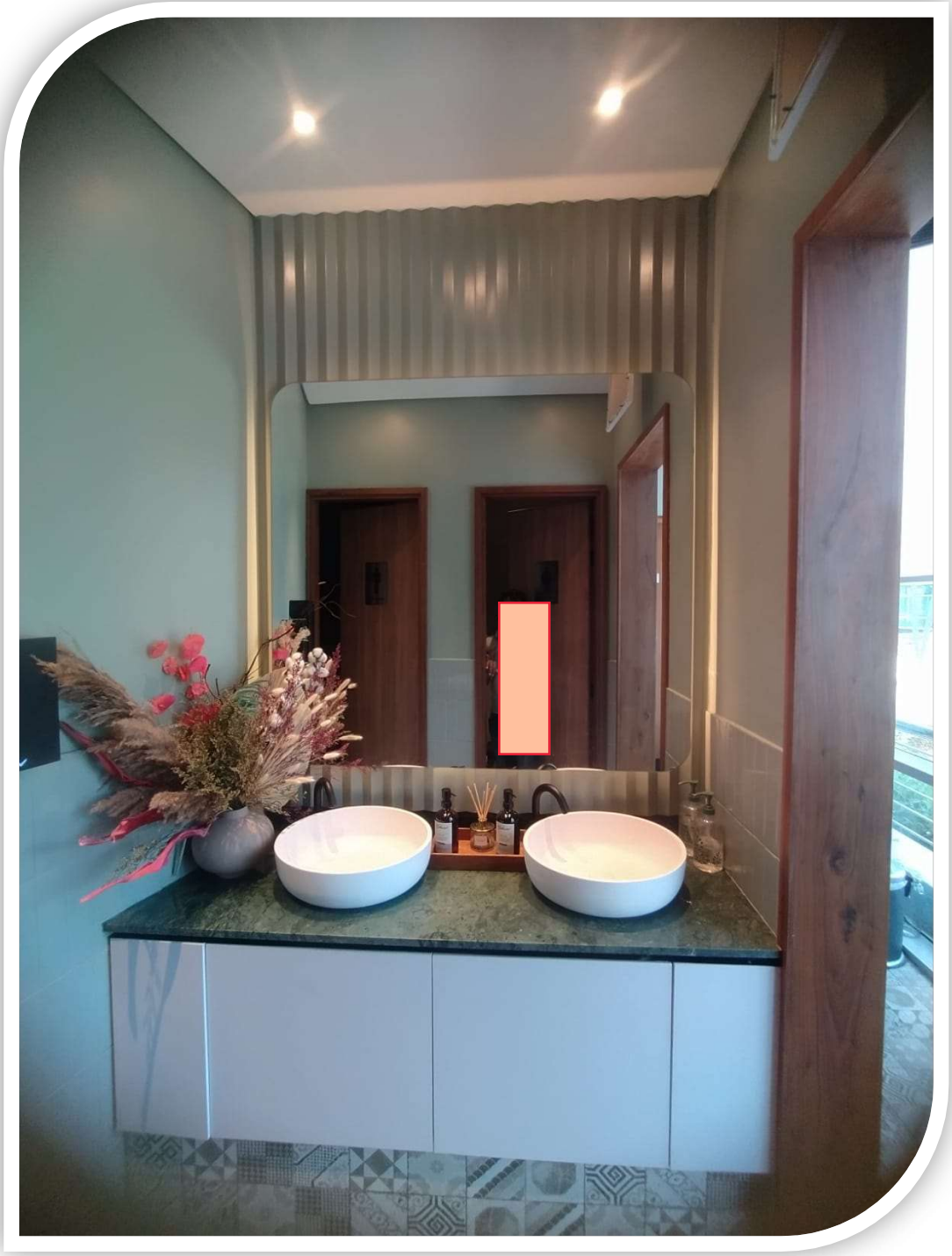

Revoren Group Brochure

REVOREN

REVOREN GROUP

OUR PHILOSOPHY IS SIMPLE...

We strive to exceed your expectations in every stage of our Business. From the initial contact, Pre-planning, Design and Procurement, through to the construction stages and aftercare service.

info@ revorengroup.com www.revorengroup.com

REVGREN

- WELCOME
- ABOUT US
- VISION
- MISSION
- KEY STRENGTH
- SCOPE WE UNDERTAKE IN INTERIOR & MEP
- HEALTH CARE
- SERVICES WE PROVIDE

REVGREN

We are specialised in...

DECORATION

JOINERY

WOODEN

ELECTRICAL

PLUMBING

MECHANICAL

SMART HOME AUTOMATION

CCTV

REVOREN

WELCOME

REVOREN GROUP is a strategic turnkey **INTERIOR & MEP** solution that specializes in providing a broad range of Interior, MEP design and Fit-out services for Residential, Commercial & Industrial Turn key environments.

Established in 2014 in India and 2020 in UAE consists of a team of highly skilled Interiors & MEP specialists that Plan, Design and Build commercial Interiors that are Imaginative, yet practical and cost effective. We provide expert services in **Interior design, MEP solutions,Construction,Consultant, Fit-out turn key solutions.**

Our reputation is based upon reliability, consistency of delivery and value.

We pride ourselves on quality design, premium construction and provide first-class service to all our Clients,Old and New. Our commitment to work closely with our Clients ensures We fulfill their requirements, deliver on schedule with highest quality to Global standards and practices with focus on continuous improvement and customer satisfaction.

REVOREN GROUP enjoys a high rate of repeat and referral business by consistently delivering positive Clients experiences While maintaining a good correlation with existing and new Clients. Our Team have expert knowledge in local fields, having 25 plus years experience skilled professional staffs, stay on top of current trends and provide a personalized hands-on approach, ensuring successful Clients collaboration and involvement.

REVOREN

ABOUT US

REVOREN GROUP operates in all types of **Interior Construction, Joinery, Furniture, Fit -out Turnkey and MEP solutions.**

Special attention is made to the **Commercial, Residential, Industrial, Institutions, Health care, Villas, Infrastructural, Private residences.**

REVOREN GROUP has each project team consists of highly skilled Interiors & MEP specialists that plan, design and build Commercial Interiors that are imaginative, yet practical and cost effective. We provide expert services in Interior design, Construction, Joinery, Furniture & MEP Turnkey consultancy, execution and Project Management including Supply & Installation and Facility management..

REVOREN GROUP is working within a partnership and turnkey service. Only in this way, you can closely follow the philosophy of the designer and give form to every conception of space. Only following this attitude some of the most refined Interiors of the World are Born, where craftsmanship, perfection in every detail, constructive attention and careful selection of materials meet in a unique synthesis.

REVOREN GROUP develops Designs and produces all the elements that make up an Interior Design: custom-made Furniture (FF & E), Fixtures, Joinery, Stone and Glass works, Paving, Lighting,MEP solutions, Custom finishes.

The wise use of precious materials, along with the most valuable manual processing brings out the best of the identity of an Global Style recognized worldwide. At the same time **REVOREN GROUP** care all the details to make each functional space efficient.

REVOREN

VISION

To be preferred partners with our Clients delivering the most challenging projects and complete Interior/MEP solutions achieving highest levels of satisfaction for our Clients and stakeholders with focus on continuous improvement, grow and diversify the business..

MISSION

To become Globally recognized leader in the field of Interior solutions that are distinctive, compelling and of Individuality, Reliable, Competitive, Sustainable that brings our Clients dream to life in places and spaces.

REVOREN GROUP is experienced in delivering a variety of high quality refurbishment, fit out work, MEP solutions, both commercially and residentially for a range of clients. We pride ourselves on our professional attitude & continuous high standard of service, focusing on setting an industry standard for construction services nationwide

Our experienced and committed management team approach each project with the care and enthusiasm required to exceed our Client's expectations, regardless of project size and value.

REVOREN GROUP has an impressive portfolio of high end projects, completed always to our client's satisfaction, maintaining our superb reputation in the industry for providing a service over and above expectations in all aspects of the construction process, from inception to completion

REVOREN

CORE VALUES

We discharge our duties with honesty, integrity and professionalism. This is the core of how we act and make decisions.

We exercise prudence in our engineering design.

We invest in staff training and development to stay at the top of the game.

We promote a cooperative team environment. We respect, listen to and appreciate all team members and business associates.

We strive to forge strong long-term relationships with our Clients.

REVOREN

KEY STRENGTH

REVOREN GROUP offers complete turnkey solutions from concept designs to completion including:

* **Concept design**
* **Design & Construct capability**
* **Design management / co- ordination**
* **Procurement**
* **Fitout**
* **Joinery**
* **MEP solutions and facilities management capabilities.**

REVOREN

SCOPE WE UNDERTAKE IN INTERIOR & MEP

We operate across the GCC and India within a range of industry sectors:

LEISURE AND HOSPITALITY

- Luxury Hotels
- Luxury Residences
- Banks
- Apartments
- Villas
- Bars, Restaurants and Food Court Outlets

REVOREN

RETAIL

* High Street
* Shopping Centre and Out-of-town

AVIATION

* Airside and Landside Works
* Business Lounges
* Retail Units (Including Hospitality)
* Refurbishment Works
* Office Fit-out

REVGREN

OFFICE AND COMMERCIAL

- OFFICE INTERIORS
- RECEPTION AREAS
- COMMERCIAL PREMISES
- INDUSTRIES
- AIRPORT TERMINAL & METRO

REVOREN

HERITAGE

* Schools
* Educational institutes
* Yatches
* Museums
* Exhibitions Center
* Visitor attractions

HEALTH CARE

- HOSPITALS
- CLEAN ROOMS
- OPTICIANS
- CLINICS

REVOREN

SERVICES WE PROVIDE

REVOREN GROUP specializes in the filed of Design and Built not limited to:-

,

- Fit-out Turnkey Solution (Which Includes Ceiling, Partition, Floor, Wall Finishes, Metal, Built In Joinery Glass and Wooden Doors Packages)
- Refurbishment
- Landlord Common areas & Receptions
- Retail & Hospitality Fit-out
- Office Design & Space Planning
- Mechanical,Electrical & Plumping Services
- It Solutions Including Smart Home Automation System & CCTV
- Workplace Furniture
- Re-location
- Project Management

REVOREN

THE DESIGN SERVICES WE DELIVER INCLUDE

- Building Option Appraisals
- Space Planning
- Test-fits
- Concept Design
- 3d Visualization
- Detailed Design
- MEP Design
- Construction Documentation

REVOREN

QUALITY POLICY

REVOREN GROUP will consistently provide products and services that meets or exceeds the requirements and expectation of our customers through timely supply of products and services, continual improvement and teamwork.

HEALTH SAFTY AND ENVIRONMENT POLICY

REVOREN GROUP is committed to achieving and maintaining excellence in all aspects of its operations. ENMAN recognizes and accepts the mandate to conduct its activities in a responsible manner and provide a system of work that protects the health and safety of its own employees, visitors, sub-contractors and the public and at the same time minimizes the impact of its activities on the environment.

We recognize the fact that good health, safety and environment (“HSE”)management has positive benefits to the organization and that commitment to a high level of HSE performance makes good business sense. It also recognizes that HSE management is an essential function, and must therefore continually improve, update and adapt to changes.

REVOREN

WHY REVOREN GROUP

To create and innovate the Interior designs to buildup the reality.

OUR PROMISE

To provide high-end creative and unique interior design solutions to create value and difference.

REVOREN GROUP

REVOREN ENGINEERING & TRADING

Address

The Binary Tower | Office 1103-9 | Business Bay | Dubai- United Arab Emirates

Guindy | Rase Horse Road | Chennai 600032 | Tamil Nadu - India

info@ revorengroup.com

www.revorengroup.com

Functional Plan

REVOREN

REVOREN GROUP FUNCTIONAL PLAN

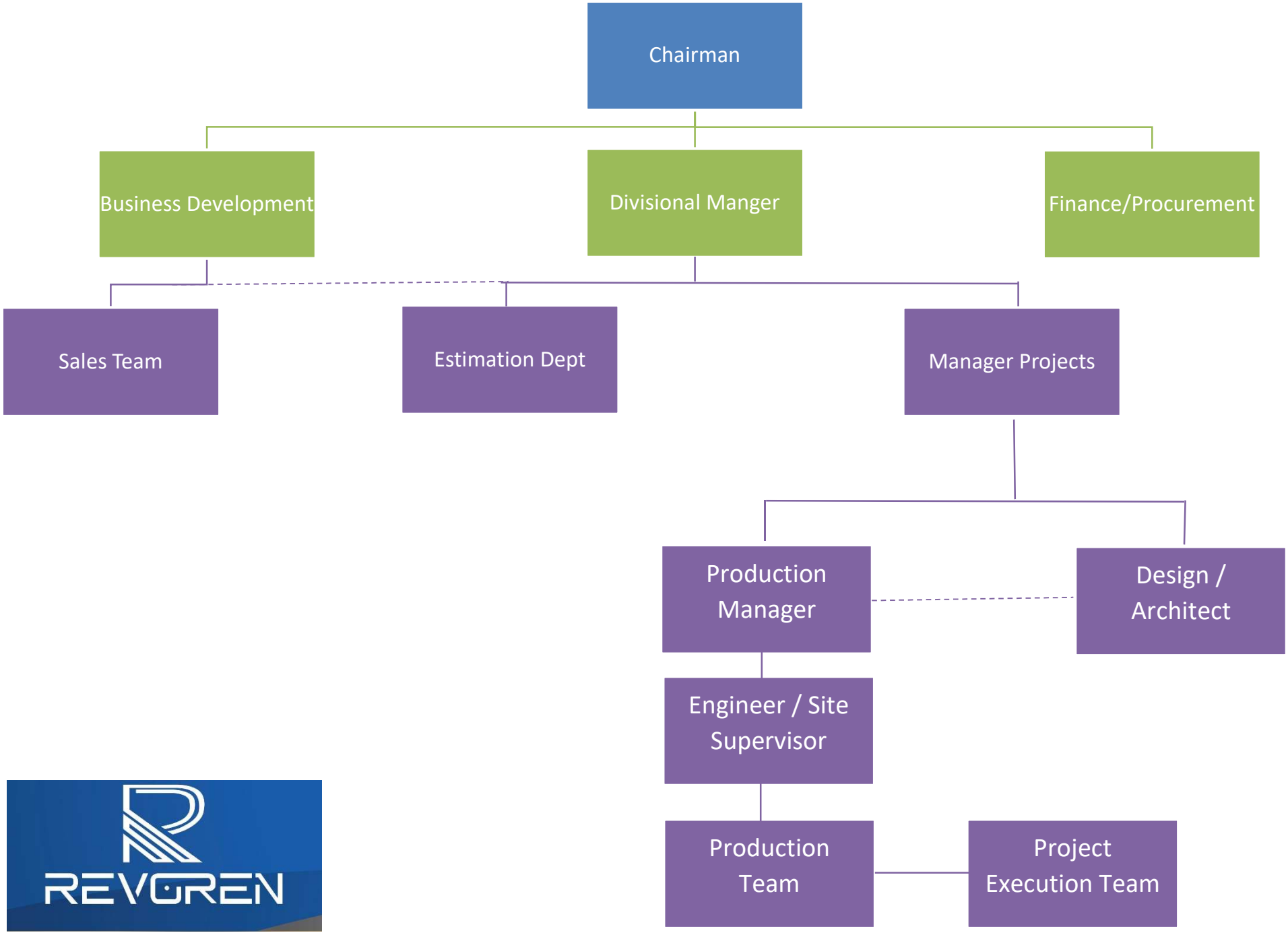

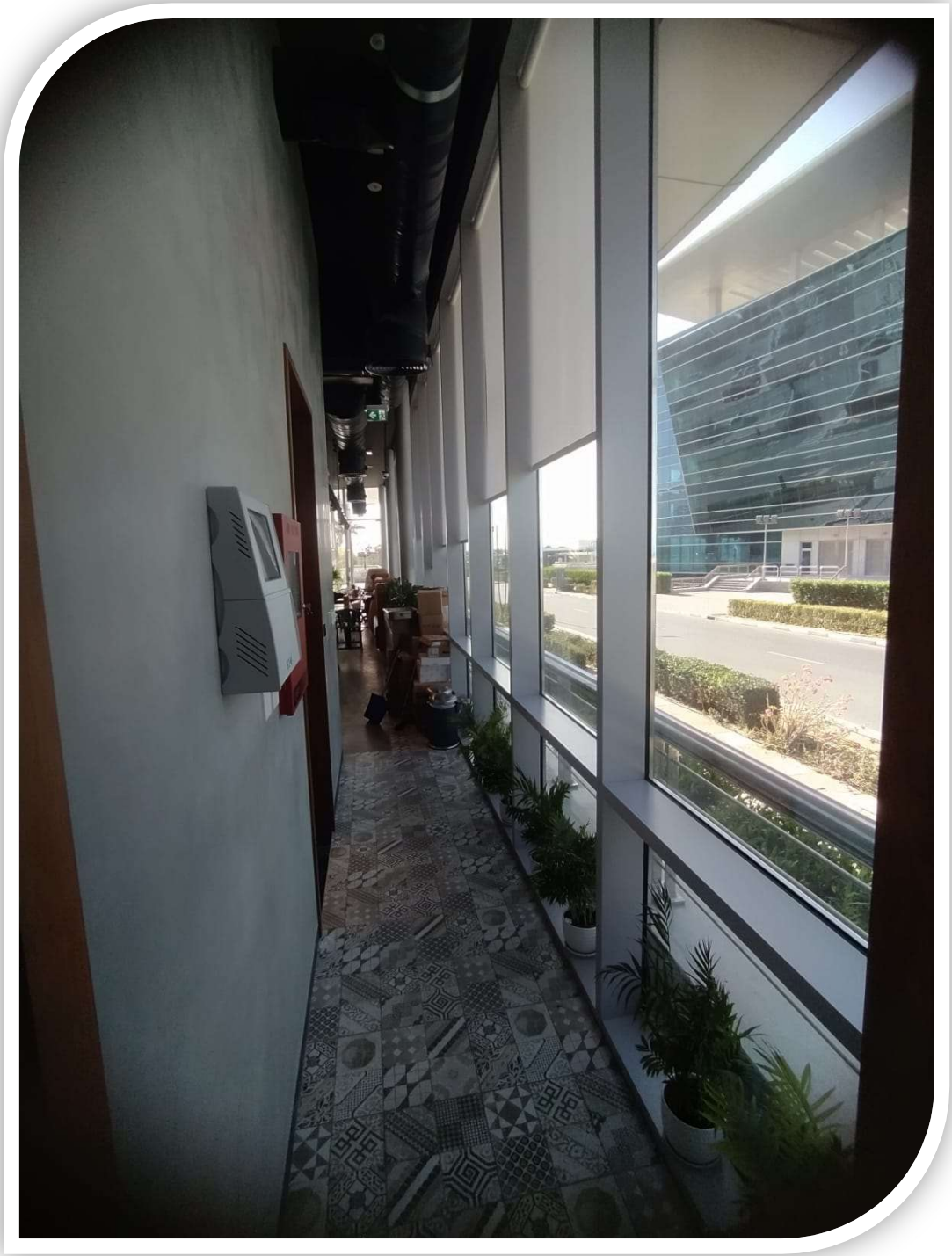

Commercial License

REVGREN

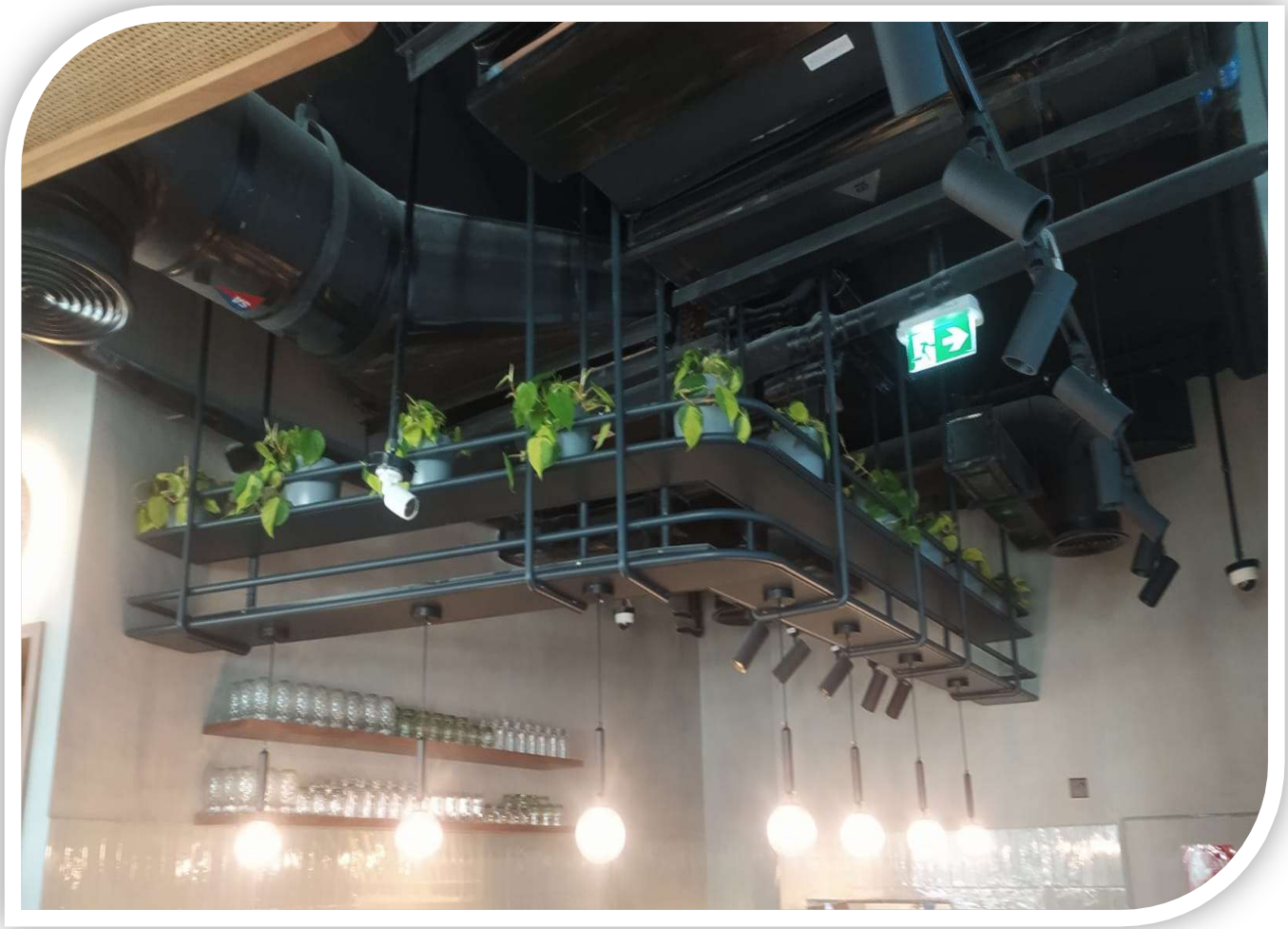

VAT Certificate

REVOREN

Revoren Group Executed/ Current Projects

REVOREN

Revoren Engineer's Executed & Current Projects

Client	Project	Location	Service
Rossovivo Artisan Pizza	Rossovivo Artisan Pizza	Dubai	Fitout
Arabella	G+1 Villa	Dubai	Fitout
Emaar / TAV Construction /DEPA	255 The Address Residences Dubai Opera A2/A3A1a	Dubai	Joinery
Mr. Abdulla Sayed Saam AL Hashmi	G+1 Villa (Renovation)	Abu Dhabi	Fitout
Square General Contracting LLC	Khalidia Palace Hotel	Dubai	Joinery
Ghantoot TPT &Gen. Cont. LLC	Mina Tower Office Building	Abu Dhabi	Joinery / Toilet Cubicle
Multiplex Middle East LLC	Parson Headquarters	Abu Dhabi	Fitout
Lulu Group / Shapoorji Pallonji Mideast LLC	Khalifa City Mall	Abu Dhabi	Fitout
Square General Contracting LLC	Commercial and Residential Building	Abu Dhabi	Fitout
Emirates Hills	Villa	Dubai	Joinery
INC Group	ECI – Etihad Credit Insurance Office	Abu Dhabi	Fitout
Meadows	G+1 Villa	Dubai	Aluminum and Glass
Dubai South / Lootah	Design and Build Nolus Restaurant	Dubai	Fitout
Advanced Industries Group	Dubai Vida Mall – Tower 1, Tower 2	Dubai	Gypsum Package (Ceiling / Partition)

Projects Approvals

REVOREN

DUBAI SOUTH / AL BURJ Engineering Consultants / LOOTAH ENGINEERING AND CONSTRUCTION	DESIGN & BUILD OF THE NOLUS	TECHNICAL SUBMITTAL (DS Approval Required)	
		Reference No.	BP159-LEC-PQD-IND-000002
Originator of Submittal	Lootah Engineering and Construction LLC	Rev. No	0
	RFP 159/BP/21 in Bussines Park of Dubai South	Date Submitted	21-Nov-21
Requested by	Arunkumar	Date Hardcopies to be issued	
Subject of Submittal	Prequalification for Joinery Works (M/s Revoren)		

Enclosure

- [ ] Programme
- [ ] Project Quality Plan
- [ ] Method Statement
- [x] Others (specify)
- [ ] HSE Plan
- [ ] Subcontractor Approval
- [ ] Handover Form
- [x] Pre-Qualification
- [ ] CV (specify trade)
- [ ] Snag List

Contractor's Authorized Representative Name	Arunkumar Construction Manager	Signature and Stamp

ENGINEER'S COMMENTS

Date Received by Engineer and		Incoming Ref. No.	

No Objection subject to following:

1) Subject to comply with project, specifications, and authorities regulations and requirements.
2) determine his scope of works.
3) expedite submit Engineering works. (shop drawings, material submittals , method statement.
4.) Visit projects that completed by (M/s. Revoren) for evaluation his performance.

ENGINEER APPROVAL STATUS	[ ] Code 1 [ ] Code 2 [ ] Code 3 [ ] Code 4 [ ] For Information Only	
Engineer's Authorized Representative Name	Qussay Al Asaad 21.11.2021	Signature, Date and Stamp
	Outgoing Ref. No.	

DUBAI SOUTH COMMENTS

Subject to visit the quality of previous projects done by Revoren .

DS APPROVAL STATUS	[ ] Code 1 [ ] Code 2 [ ] Code 3 [ ] Code 4 [ ] For Information Only	
DS Technical Team Name and Position		Signature, Date and Stamp
DS Design Manager Name and Position		Signature, Date and Stamp
DS Project Manager Name		Signature, Date and Stamp
	Outgoing Ref. No.	

CONTRACTOR RECEIVED SIGNATURE

Name		Date, Signature and Stamp	

DOCUMENT STATUS

Code 1 - Approved.
Code 2 - Approved as noted, work may proceed subject to incorporation of comments indicated.
Code 3 - Revise & resubmit.
Code 4 - Rejected

Corrections or comments made relative to submittals during this review do not relieve the contractor from compliance with the contract requirments and specfications. This check is only for review of general conformance with the design concept of the

Any amendments to this form should be approved by the Engineer and Dubai South prior to use by the contractor.

DUBAI SOUTH / AL BURJ Engineering Consultants / LOOTAH ENGINEERING AND CONSTRUCTION	DESIGN & BUILD OF THE NOLUS	SHOP DRAWING SUBMITTAL	
		Reference No.	BP159-LEC-SHD-CIV-000020
	RFP 159/BP/21 in Bussines Park of Dubai South	Rev. No	1
		Date Submitted	28-Dec-21
Originator of Submittal	LOOTAH ENGINEERING AND CONSTRUCTION LLC	No. of hardcopies	Soft copy

REFERENCE NUMBER	DRAWING TITLE	DESCRIPTION
BP159-LEC-SHD-CIV-000057	Booth Seat Details-1	
BP159-LEC-SHD-CIV-000058	Booth Seat Details-2	
BP159-LEC-SHD-CIV-000067	Wooden Storage Location	

Contractor's Authorized Representative Name	Omar Soliman Technical Manager	Signature and Stamp

Contractor's Statement: ***We certify that the shop drawings drawings submitted herewith is prepared in details and reflects the actual as-built condition of the works and is prepared in compliance with the shop drawings, redline drawings and specifiction except as otherwise specfically stated hereabove.***

Received by Engineer's Authorized Representative Name		Signature, Date and Stamp

ENGINEER'S COMMENTS

Hardcopies - Date Received by Engineer		Incoming Ref. No., if applicable (to be filled by RE)	

1) All the Back Seat thickness 50mm and at plantre 30mm on planter and 20mm standalone.
2) Termination with Planter to be as discussed, Groove vertical and horizontal same level of planter to be provided.
3) All measurement as per site conditions. Contractor has to mark at site for final approval.
4) Full coordinations with MEP Subcontractor.
5) This approval will not relieve Contractor from his liability.
6) Subject to no cost and time impact.

ENGINEER'S APPROVAL STATUS	☐ Code 1 ☒ Code 2 ☐ Code 3 ☐ Code 4 ☐ For Information Only	
Reviewed by Engineer's Technical Team (Name and Position)		Signature, Date
Engineer's Authorized Representative Name	Qussay Al Asaad 03.01.2922	Signature, Date and Stamp
Outgoing Ref. No., if applicable (to be filled by RE)		

CONTRACTOR RECEIVED SIGNATURE

Contractor's Authorized Representative Name		Signature and Stamp

DOCUMENT STATUS
Code 1 - Approved.
Code 2 - Approved as noted, work may proceed subject to incorporation of comments indicated.
Code 3 - Revise & resubmit.
Code 4 - Rejected
Corrections or comments made relative to submittals during this review do not relieve the contractor from compliance with the contract requirements and specfications.
Any amendments to this form should be approved by the Engineer and Dubai South prior to use by the contractor.

DUBAI SOUTH / AL BURJ Engineering Consultants / LOOTAH ENGINEERING AND CONSTRUCTION	DESIGN & BUILD OF THE NOLUS	SHOP DRAWING SUBMITTAL	
		Reference No.	BP159-LEC-SHD-CIV-000025
	RFP 159/BP/21 in Bussines Park of Dubai South	Rev. No	1
		Date Submitted	04-Jan-22
Originator of Submittal	LOOTAH ENGINEERING AND CONSTRUCTION LLC	No. of hardcopies	Soft copy

REFERENCE NUMBER	DRAWING TITLE	DESCRIPTION
BP159-LEC-SHD-CIV-000065	Waiting Bench Details	
BP159-LEC-SHD-CIV-000066	Waiting Bench Location	

Contractor's Authorized Representative Name	Omar Soliman Technical Manager	Signature and Stamp

Contractor's Statement: ***We certify that the shop drawings drawings submitted herewith is prepared in details and reflects the actual as-built condition of the works and is prepared in compliance with the shop drawings, redline drawings and specifiction except as otherwise specfically stated hereabove.***

Received by Engineer's Authorized Representative Name		Signature, Date and Stamp

ENGINEER'S COMMENTS

Hardcopies - Date Received by Engineer		Incoming Ref. No., if applicable (to be filled by RE)	

- See comments on the attached drawings below:
- Subject to compliance with project sprcification and authority regulations / Requirements.
- Subject to no cost and time impact.
- This approval will not relieve Contractor from his liability.

ENGINEER'S APPROVAL STATUS	☐ Code 1	☒ Code 2	☐ Code 3	☐ Code 4	☐ For Information Only
Reviewed by Engineer's Technical Team (Name and Position)					Signature, Date
Engineer's Authorized Representative Name	Qussay Al Asaad 05.01.2022				Signature, Date and Stamp
Outgoing Ref. No., if applicable (to be filled by RE)					

CONTRACTOR RECEIVED SIGNATURE

Contractor's Authorized Representative Name		Signature and Stamp

DOCUMENT STATUS
Code 1 - Approved.
Code 2 - Approved as noted, work may proceed subject to incorporation of comments indicated.
Code 3 - Revise & resubmit.
Code 4 - Rejected
Corrections or comments made relative to submittals during this review do not relieve the contractor from compliance with the contract requirements and specfications.
Any amendments to this form should be approved by the Engineer and Dubai South prior to use by the contractor.

DUBAI SOUTH / AL BURJ Engineering Consultants / LOOTAH ENGINEERING AND CONSTRUCTION	DESIGN & BUILD OF THE NOLUS	SHOP DRAWING SUBMITTAL	
		Reference No.	BP159-LEC-SHD-CIV-000019
	RFP 159/BP/21 in Bussines Park of Dubai South	Rev. No	1
		Date Submitted	28-Dec-21
Originator of Submittal	LOOTAH ENGINEERING AND CONSTRUCTION LLC	No. of hardcopies	Soft copy

REFERENCE NUMBER	DRAWING TITLE	DESCRIPTION
BP159-LEC-SHD-CIV-000055	Banquet Seat 1 Details	
BP159-LEC-SHD-CIV-000056	Banquet Seat 2 Details	
BP159-LEC-SHD-CIV-000068	Banquet Seat 1 Location	
BP159-LEC-SHD-CIV-000069	Banquet Seat 2 Location	

Contractor's Authorized Representative Name	Omar Soliman Technical Manager	Signature and Stamp

Contractor's Statement: ***We certify that the shop drawings drawings submitted herewith is prepared in details and reflects the actual as-built condition of the works and is prepared in compliance with the shop drawings, redline drawings and specifiction except as otherwise specfically stated hereabove.***

Received by Engineer's Authorized Representative Name		Signature, Date and Stamp

ENGINEER'S COMMENTS

Hardcopies - Date Received by Engineer		Incoming Ref. No., if applicable (to be filled by RE)	

1) See comments on the attached drawings
2)Width of banquet if it is possible to reduce for more spaces and circulation.
3) All Back seat (supports) thickness to be 50 mm.
4) All measurement should be taken as per site conditions.
5) Contractor has to mark banquets at site for final approval.
6) This approval will not relieve Contractor fro his liability.
7) Subject to no cost and time impact.

ENGINEER'S APPROVAL STATUS	☐ Code 1 ☒ Code 2 ☐ Code 3 ☐ Code 4 ☐ For Information Only	
Reviewed by Engineer's Technical Team (Name and Position)		Signature, Date
Engineer's Authorized Representative Name	Qussay Al Asaad 29.12.2021	Signature, Date and Stamp
Outgoing Ref. No., if applicable (to be filled by RE)		

CONTRACTOR RECEIVED SIGNATURE

Contractor's Authorized Representative Name		Signature and Stamp

DOCUMENT STATUS
Code 1 - Approved.
Code 2 - Approved as noted, work may proceed subject to incorporation of comments indicated.
Code 3 - Revise & resubmit.
Code 4 - Rejected
Corrections or comments made relative to submittals during this review do not relieve the contractor from compliance with the contract requirements and specfications.
Any amendments to this form should be approved by the Engineer and Dubai South prior to use by the contractor.

DUBAI SOUTH / AL BURJ Engineering Consultants / LOOTAH ENGINEERING AND CONSTRUCTION	DESIGN & BUILD OF THE NOLUS	SHOP DRAWING SUBMITTAL	
		Reference No.	BP159-LEC-SHD-CIV-000010
	RFP 159/BP/21 in Bussines Park of Dubai South	Rev. No	2
		Date Submitted	26-Dec-21
Originator of Submittal	LOOTAH ENGINEERING AND CONSTRUCTION LLC	No. of hardcopies	Soft copy

REFERENCE NUMBER	DRAWING TITLE	DESCRIPTION
BP159-LEC-SHD-CIV-000040	Ceiling Finishes Plan	
BP159-LEC-SHD-CIV-000041	Ceiling Section-1	
BP159-LEC-SHD-CIV-000042	Ceiling Section-2	
BP159-LEC-SHD-CIV-000043	Ceiling Details	

Contractor's Authorized Representative Name	Omar Soliman Technical Manager	Signature and Stamp

Contractor's Statement: ***We certify that the shop drawings drawings submitted herewith is prepared in details and reflects the actual as-built condition of the works and is prepared in compliance with the shop drawings, redline drawings and specifiction except as otherwise specfically stated hereabove.***

Received by Engineer's Authorized Representative Name		Signature, Date and Stamp

ENGINEER'S COMMENTS

Hardcopies - Date Received by Engineer		Incoming Ref. No., if applicable (to be filled by RE)	

- See comments on the attched shop drawing.

- Detail sections for bulkhead box to be submitted .
- Aluminium section to be fixation wit structural steel elements on;y.
- All related heights as per your proposal given during meeting held dated 27.12.21 to be considered with details drawings.

ENGINEER'S APPROVAL STATUS	☐ Code 1 ☐ Code 2 ☐ Code 3 ☐ Code 4 ☐ For Information Only	
Reviewed by Engineer's Technical Team (Name and Position)		Signature, Date
Engineer's Authorized Representative Name	Qussay Al Asaad 27.12.2021	Signature, Date and Stamp
Outgoing Ref. No., if applicable (to be filled by RE)		

CONTRACTOR RECEIVED SIGNATURE

Contractor's Authorized Representative Name		Signature and Stamp

DOCUMENT STATUS
Code 1 - Approved.
Code 2 - Approved as noted, work may proceed subject to incorporation of comments indicated.
Code 3 - Revise & resubmit.
Code 4 - Rejected
Corrections or comments made relative to submittals during this review do not relieve the contractor from compliance with the contract requirements and specfications.
Any amendments to this form should be approved by the Engineer and Dubai South prior to use by the contractor.

DUBAI SOUTH / AL BURJ Engineering Consultants / LOOTAH Engineering and Construction	DESIGN & BUILD OF THE NOLUS	SHOP DRAWING SUBMITTAL	
		Reference No.	BP159-LEC-SHD-CIV-000018
	RFP 159/BP/21 in Bussines Park of Dubai South	Rev. No	0
		Date Submitted	19-Dec-21
Originator of Submittal	LOOTAH ENGINEERING AND CONSTRUCTION LLC	No. of hardcopies	Soft copy

REFERENCE NUMBER	DRAWING TITLE	DESCRIPTION
BP159-LEC-SHD-CIV-000059	SMDB & DB Door Details	

Contractor's Authorized Representative Name	Omar Soliman Technical Manager	Signature and Stamp

Contractor's Statement: ***We certify that the shop drawings drawings submitted herewith is prepared in details and reflects the actual as-built condition of the works and is prepared in compliance with the shop drawings, redline drawings and specifiction except as otherwise specfically stated hereabove.***

Received by Engineer's Authorized Representative Name		Signature, Date and Stamp

ENGINEER'S COMMENTS

Hardcopies - Date Received by Engineer		Incoming Ref. No., if applicable (to be filled by RE)	

No objection subject to following:

1.) Material submittal for MDF, edge solid wood and accessories to be submitted for approval.
2.) Subject to comply with project, specifications and authorities regulations and requirements.
3.) Coordination with MEP subcontractor for make sure that accommodate all SMDB/DB components
4.) This approval not relieve Contractor from his liability.
5.) Subject to no cost and time impact.

ENGINEER'S APPROVAL STATUS	☐ Code 1 ☐ Code 2 ☐ Code 3 ☐ Code 4 ☐ For Information Only	
Reviewed by Engineer's Technical Team (Name and Position)		Signature, Date
Engineer's Authorized Representative Name	Qussay Al Asaad 19.12.2021	Signature, Date and Stamp
Outgoing Ref. No., if applicable (to be filled by RE)		

CONTRACTOR RECEIVED SIGNATURE

Contractor's Authorized Representative Name		Signature and Stamp

DOCUMENT STATUS
Code 1 - Approved.
Code 2 - Approved as noted, work may proceed subject to incorporation of comments indicated.
Code 3 - Revise & resubmit.
Code 4 - Rejected
Corrections or comments made relative to submittals during this review do not relieve the contractor from compliance with the contract requirements and specfications.
Any amendments to this form should be approved by the Engineer and Dubai South prior to use by the contractor.

DUBAI SOUTH / AL BURJ Engineering Consultants / LOOTAH ENGINEERING AND CONSTRUCTION	DESIGN & BUILD OF THE NOLUS	SHOP DRAWING SUBMITTAL		
		Reference No.	BP159-LEC-SHD-CIV-000012	
	RFP 159/BP/21 in Bussines Park of Dubai South	Rev. No	0	
		Date Submitted	09-Dec-21	
Originator of Submittal	LOOTAH ENGINEERING AND CONSTRUCTION LLC	No. of hardcopies	Soft copy	

REFERENCE NUMBER	DRAWING TITLE	DESCRIPTION
BP159-LEC-SHD-CIV-000038	Fire Rated Wooden Door	

Contractor's Authorized Representative Name	Omar Soliman Technical Manager	Signature and Stamp

Contractor's Statement: ***We certify that the shop drawings drawings submitted herewith is prepared in details and reflects the actual as-built condition of the works and is prepared in compliance with the shop drawings, redline drawings and specifiction except as otherwise specfically stated hereabove.***

Received by Engineer's Authorized Representative Name		Signature, Date and Stamp

ENGINEER'S COMMENTS

Hardcopies - Date Received by Engineer		Incoming Ref. No., if applicable (to be filled by RE)	

See comments on the attached drawings.

1.) (Architrave) to be simple / plane see attached photo.

2.)There is no block shoulder (Refer to Detailed drawings Door D2), Also check site condition.

3.) Schedule for ironmongery, and Fire rating are not provided (Door closer, Door stopper, kick plate, push plate, Hinges with size).

4.) Door shutter width minimum 80cm.

5.) Frame size to be compatible with block size around, whether there is block shoulder or not.

6.) Type of wood for frame and veneer to be (TV-01) WALNUT

ENGINEER'S APPROVAL STATUS	☐ Code 1 ☒ Code 2 ☐ Code 3 ☐ Code 4 ☐ For Information Only	
Reviewed by Engineer's Technical Team (Name and Position)		Signature, Date
Engineer's Authorized Representative Name	Qussay Al Asaad 12.12.2021	Signature, Date and Stamp
Outgoing Ref. No., if applicable (to be filled by RE)		

CONTRACTOR RECEIVED SIGNATURE

Contractor's Authorized Representative Name		Signature and Stamp

DOCUMENT STATUS
Code 1 - Approved.
Code 2 - Approved as noted, work may proceed subject to incorporation of comments indicated.
Code 3 - Revise & resubmit.
Code 4 - Rejected
Corrections or comments made relative to submittals during this review do not relieve the contractor from compliance with the contract requirements and specfications.
Any amendments to this form should be approved by the Engineer and Dubai South prior to use by the contractor.

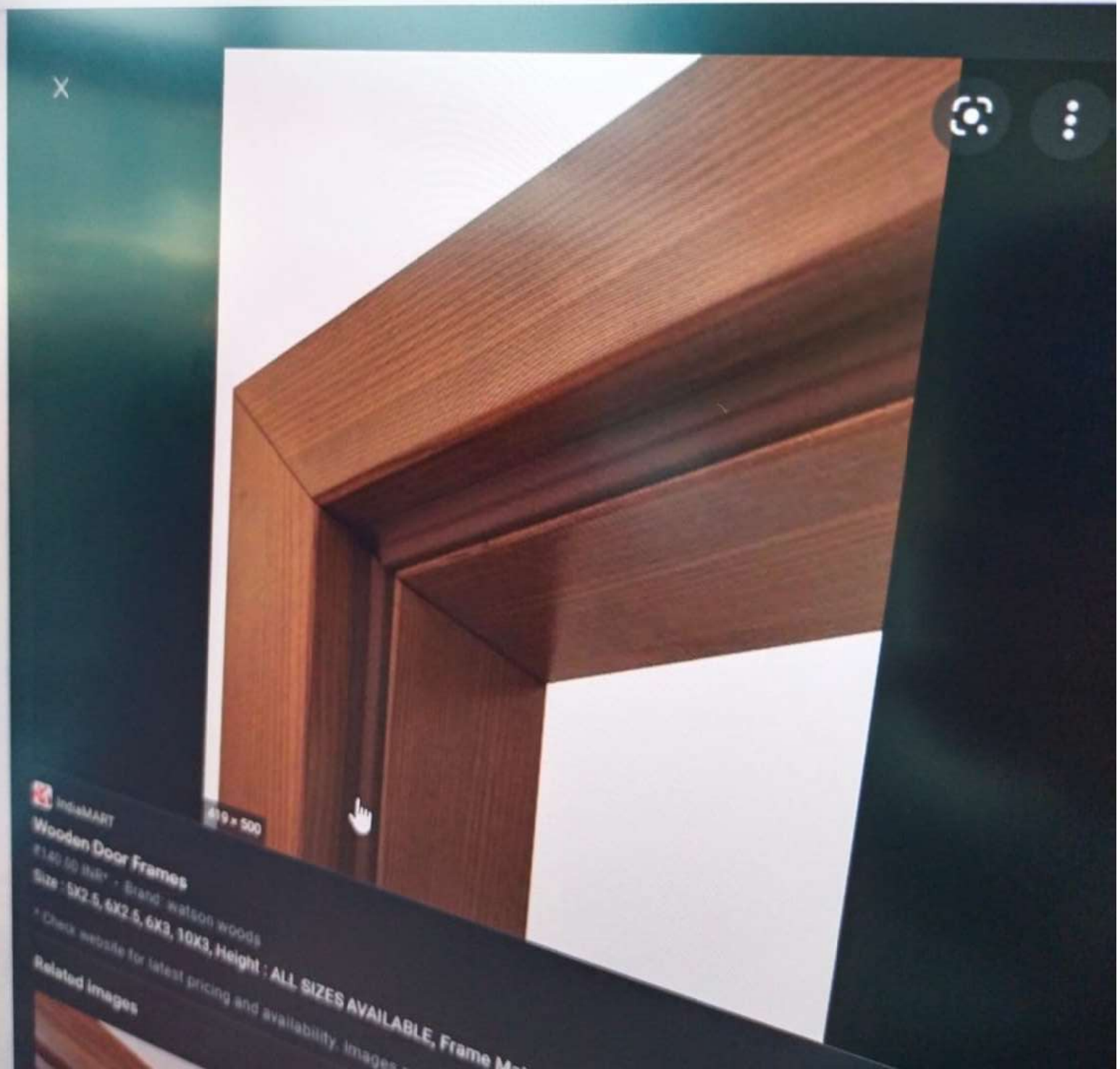
IndiaMART
Wooden Door Frames
₹140.00 INR* · Brand: watson woods
Size : 5X2.5, 6X2.5, 6X3, 10X3, Height : ALL SIZES AVAILABLE, Frame Ma
* Check website for latest pricing and availability. Images
Related images

A1

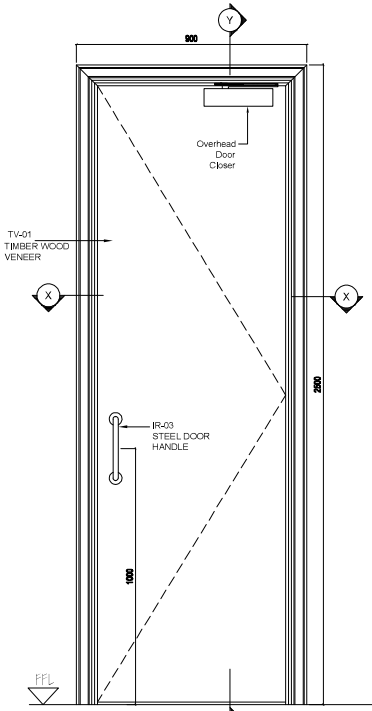

FRONT ELEVATION
SCALE 1:10

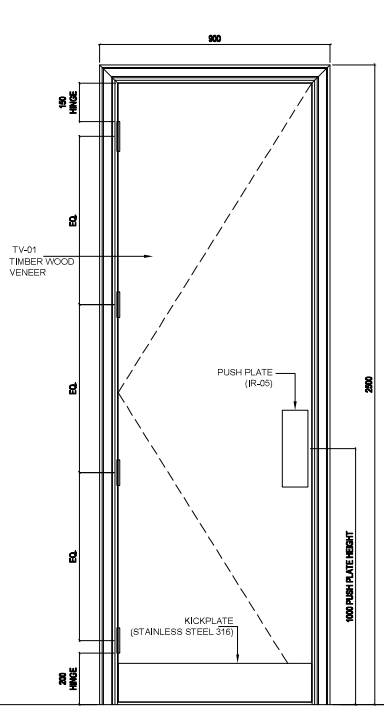

REAR ELEVATION
SCALE 1:10

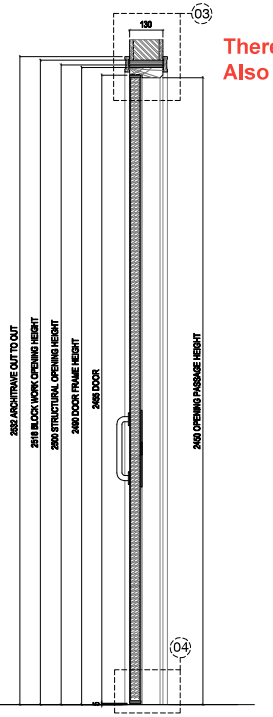

There is no block shoulder (Refer to Detailed drawings Door D2)
Also check site condition

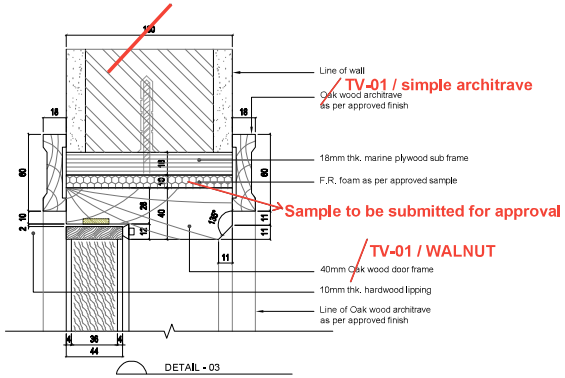

DETAIL - 03
SCALE 1:2

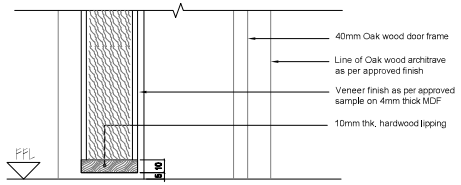

DETAIL - 04
SCALE 1:2

Minimum 80cm door shutter

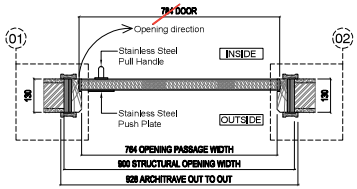

SECTION THRU 'X-X'
SCALE 1:10

This Architrave is not acceptable

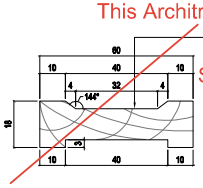

Simple Architrave is required

DETAIL OF DOOR ARCHITRAVE
SCALE 1:1

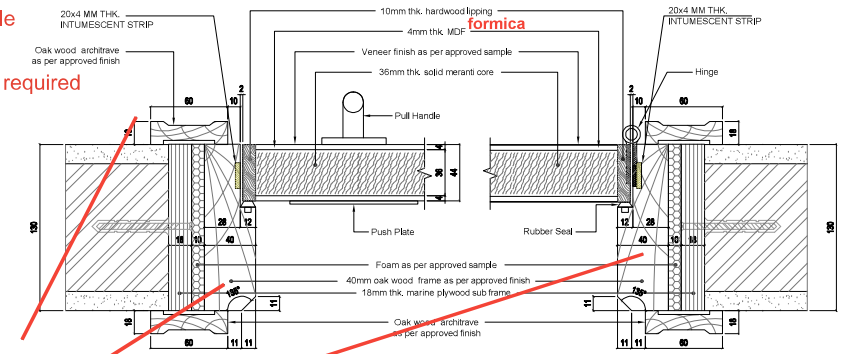

DETAIL-01
SCALE 1:2

DETAIL-02
SCALE 1:2

Frame size to be compatible with block size around, whether there is block shoulder or not.

1 DOOR DETAILS-D2
Scale AS SHOWN

KEY PLAN:

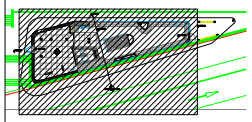

GENERAL NOTES:

1. DO NOT SCALE FROM THIS DRAWING.
2. ALL DIMENSIONS ARE IN MILLIMETERS. LEVELS ARE IN METERS UNLESS NOTED OTHERWISE.
3. THIS DRAWING SHOULD BE READ IN CONJUCTION WITH OTHER RELEVANT ARCHITECTURAL, STRUCTURAL, MECHANICAL & ELECTRICAL DRAWINGS AND SECTIONS OF THE SPECIFICATIONS.

REV	DATE	DETAIL
0	05/12/2021	FIRST ISSUE FOR APPROVAL

CONSULTANT:

yaghmour architects planners engineers

CLIENT:

DUBAI SOUTH

SUPERVISION CONSULTANT:

AL BURJ Engineering Consultants

MAIN CONTRACTOR:

LOOTAH ENGINEERING AND CONSTRUCTION

ID CONTRACTOR:

REVOREN
www.revorengroup.com
info@revorengroup.com

PROJECT NAME:

DESIGN & BUILD OF THE NOLUS IN BUSINESS PARK SOUTH DUBAI,UAE

TITLE:

FIRE RATED WOODEN DOOR

		DATE
DRAWN BY	MUSTHAFA	05-12-2021
CHECKED BY	SARA	
APPROVED BY	SARA	
SCALE	A1 / AS SHOWN	
DRAWING NUMBER		REV
BP159-LEC-SHD-CIV-000038-PDF		0

				MATERIAL SUBMITTAL FORM	
DUBAI SOUTH	AL BURJ Engineering Consultants	LOOTAH ENGINEERING AND CONSTRUCTION	DESIGN & BUILD OF THE NOLUS	Reference No.	BP159-LEC-MAT-ARC-000001
				Rev. No.	0
Originator of Submittal	Lootah Engineering and Construction LLC		RFP 159/BP/21 in Bussines Park of Dubai South	Date	10 November 2021

Item	Description	Discipline		List of Enclosure
Specifications Reference		(Tick as Applicable)		
		☐	Infrastructure	☐ Prequalification Documents
BOQ Reference		■	Architectural	☐ Trade License
		☐	Structural	■ Vendor's Technical Literature
Drawing Reference		☐	Mechanical	☐ List of Previous Projects Done
Material Specified	Material Submittal & Colour Sample for Ceiling Paint & Wall Finishes	☐	Electrical	☐ Compliance Statement Sheet (*)
		☐	HVAC	☐ Method Statement
Material Proposed	Ceiling Paint & Wall Finishes	☐	Plumbing	☐ Previous Test Results
		☐	Finishes	☐ Copy of the Related Specifications
Manufacturer/Supplier	Jotun	☐	External Works	■ Sample with Sample Tag(**)
Address of Manufacturer	Dubai, U.A.E	☐	Civil Works	☐ Shop Drawings (if applicable)
Contractor Remarks		☐	Landscaping	☐ Others (specify)
Date Required on Site				
Expected Date of Arrival of Material on Site:		Expected Date of Material Submittal Documents to RE:		

Notes:

*Compliance statement sheet covering each paragraph and subparagraph of the specification and deviations should be clearly marked.
Advantages/disadvantages betweent the specified and proposed to be mentioned. This statement must be attached to the relevant submittal form.
**Samples should be presented on a sample board suitably identified with labels. Where it is not possible to present a sample on sample board due to size constraints, sample tag should be attached properly. Photos of samples should be be included in the submittal.
All document submissions should be include one Original along with a soft copy in PDF Format with this submission.
When a resubmission is made based on The Engineer's comments, the compliance/reply to each comment should be clearly mentioned point by point. The specified format should be filled in accordinly and attached to the submittal form.

Contractor Statement: ***We certify that the material specified herewith has been reviewed in detail and is in compliance with the contract drawings and specifications except as otherwise stated above.***

Contractor's Authorized Representative Name	Arunkumar Construction Manager	Signature and Stamp

ENGINEER'S COMMENTS

Incoming Ref. No. , if applicable (to be filled by RE)

Material Submittal: Ceiling Paint and wall Finishes from (JOTUN UAE) is approved subject ti following:

1.) subject to comply with project (control samples), Green building and authorities regulations and requirements.

2.) Contractor has to follow manufacturer recommendations during execution and storage.

3.) Final approval for Colours is final selections with all surrounding by Client and concerned parties.

4.) This approval not relieve Contractor from his liability.

Continued on next page…

ENGINEER'S APPROVAL STATUS	☐ Code 1	☐ Code 2	☐ Code 3	☐ Code 4	☐ For Information Only
RE Technical Team Review Name and Position					Signature, Date and Stamp
Engineer's Authorized Representative Name	Qussay Al Asaad 17.11.2021				Signature, Date and Stamp

DUBAI SOUTH COMMENTS (To be filled up by DS Development Management Department)

DUBAI SOUTH APPROVAL STATUS	☐ Code 1	☐ Code 2	☐ Code 3	☐ Code 4	☐ For Information Only
Technical Team (Development Management) Reviewer Name and Position					Signature and Date
Design Manager Name					Signature and Date
Project Manager Name					Signature and Date
Outgoing Ref. No., if applicable (to be filled by RE)					

CONTRACTOR RECEIVED SIGNATURE			
Date		Signature and Stamp	

DOCUMENT STATUS
Code 1 - Approved.
Code 2 - Approved as noted, work may proceed subject to incorporation of comments indicated.
Code 3 - Revise & resubmit.
Code 4 - Rejected
Corrections or comments made relative to submittals during this review do not relieve the contractor from compliance with the contract requirments and specfications. This check is only for review of general conformance with the design concept of the project and general compliance with the information given in the contract documents.
Any amendments to this form should be approved by the Engineer and Dubai South prior to use by the contractor.

DUBAI SOUTH / AL BURJ Engineering Consultants / LOOTAH ENGINEERING AND CONSTRUCTION	DESIGN & BUILD OF THE NOLUS	SHOP DRAWING SUBMITTAL	
		Reference No.	BP159-LEC-SHD-CIV-0000008
	RFP 159/BP/21 in Bussines Park of Dubai South	Rev. No	0
		Date Submitted	30-Nov-21
Originator of Submittal	LOOTAH ENGINEERING AND CONSTRUCTION LLC	No. of hardcopies	Soft copy

REFERENCE NUMBER	DRAWING TITLE	DESCRIPTION
BP159-LEC-SHD-CIV-000046	External Wall Cladding Details-1	
BP159-LEC-SHD-CIV-000047	External Wall Cladding Details-2	
BP159-LEC-SHD-CIV-000048	External Wall Cladding Details-3	

Contractor's Authorized Representative Name	Omar Soliman Technical Manager	Signature and Stamp

Contractor's Statement: ***We certify that the shop drawings drawings submitted herewith is prepared in details and reflects the actual as-built condition of the works and is prepared in compliance with the shop drawings, redline drawings and specifiction except as otherwise specfically stated hereabove.***

Received by Engineer's Authorized Representative Name		Signature, Date and Stamp

ENGINEER'S COMMENTS

Hardcopies - Date Received by Engineer		Incoming Ref. No., if applicable (to be filled by RE)	

- Structural calculation for fixation to be submitted
1.) Refer to Engineer comments on attached shop drawings
2.) Any stainless steel materials should be Grade 316.
3.) Srtuctural opening for openings should be respected (Kitchen door width)
4.) Specified coated paint should be applied on concrete block prior start fixation.
5.) Subject to mock-up sample fixation forfinal Client/Engineer approval.
6.) Aluminium framing to be providing between Tiles cladding and curtain wall.
7.) Any approval will not relieve Contractor from his liability.
8.) Subject to no cost and time impact.
- Detail drawings showing how start fixation based on site measurements to be submitted to avoid cut pieces (if any)

ENGINEER'S APPROVAL STATUS	☐ Code 1 ☐ Code 2 ☐ Code 3 ☐ Code 4 ☐ For Information Only	
Reviewed by Engineer's Technical Team (Name and Position)		Signature, Date
Engineer's Authorized Representative Name	Qussay Al Asaad 06.12.2021	Signature, Date and Stamp
Outgoing Ref. No., if applicable (to be filled by RE)		

CONTRACTOR RECEIVED SIGNATURE

Contractor's Authorized Representative Name		Signature and Stamp

DOCUMENT STATUS
Code 1 - Approved.
Code 2 - Approved as noted, work may proceed subject to incorporation of comments indicated.
Code 3 - Revise & resubmit.
Code 4 - Rejected
Corrections or comments made relative to submittals during this review do not relieve the contractor from compliance with the contract requirements and specfications.
Any amendments to this form should be approved by the Engineer and Dubai South prior to use by the contractor.

DUBAI SOUTH / AL BURJ Engineering Consultants / LOOTAH Engineering and Construction	DESIGN & BUILD OF THE NOLUS	SHOP DRAWING SUBMITTAL	
		Reference No.	BP159-LEC-SHD-CIV-000021
	RFP 159/BP/21 in Bussines Park of Dubai South	Rev. No	1
		Date Submitted	26-Dec-21
Originator of Submittal	LOOTAH ENGINEERING AND CONSTRUCTION LLC	No. of hardcopies	Soft copy

REFERENCE NUMBER	DRAWING TITLE	DESCRIPTION
BP159-LEC-SHD-CIV-000060	FHRC Door Details	

Contractor's Authorized Representative Name	Omar Soliman Technical Manager	Signature and Stamp

Contractor's Statement: ***We certify that the shop drawings drawings submitted herewith is prepared in details and reflects the actual as-built condition of the works and is prepared in compliance with the shop drawings, redline drawings and specifiction except as otherwise specfically stated hereabove.***

Received by Engineer's Authorized Representative Name		Signature, Date and Stamp

ENGINEER'S COMMENTS

Hardcopies - Date Received by Engineer		Incoming Ref. No., if applicable (to be filled by RE)	

- Subject to comply with project and authorities regulations and requirements

1) HDF18mm MR door with solid wood edge is requred / Frameless PA-01 Finishes
2) Frame to be canceled, and door leaf install with block wall by concealed hinges
3) Closing door detail has to be shown.
4) Also, SS Strip around frame to be canceled.

- This approval will not relieve Contractor from his liability and subject to no cost and time impact

ENGINEER'S APPROVAL STATUS	☐ Code 1 ☐ Code 2 ☐ Code 3 ☐ Code 4 ☐ For Information Only	
Reviewed by Engineer's Technical Team (Name and Position)		Signature, Date
Engineer's Authorized Representative Name	**Qussay Al asaad 27.12.2021**	Signature, Date and Stamp
Outgoing Ref. No., if applicable (to be filled by RE)		

CONTRACTOR RECEIVED SIGNATURE

Contractor's Authorized Representative Name		Signature and Stamp

DOCUMENT STATUS
Code 1 - Approved.
Code 2 - Approved as noted, work may proceed subject to incorporation of comments indicated.
Code 3 - Revise & resubmit.
Code 4 - Rejected
Corrections or comments made relative to submittals during this review do not relieve the contractor from compliance with the contract requirements and specfications.
Any amendments to this form should be approved by the Engineer and Dubai South prior to use by the contractor.

DUBAI SOUTH / AL BURJ Engineering Consultants / LOOTAH ENGINEERING AND CONSTRUCTION	DESIGN & BUILD OF THE NOLUS	SHOP DRAWING SUBMITTAL	
		Reference No.	BP159-LEC-SHD-CIV-000028
	RFP 159/BP/21 in Bussines Park of Dubai South	Rev. No	0
		Date Submitted	04-Jan-22
Originator of Submittal	LOOTAH ENGINEERING AND CONSTRUCTION LLC	No. of hardcopies	Soft copy

REFERENCE NUMBER	DRAWING TITLE	DESCRIPTION
BP159-LEC-SHD-CIV-000074	Grab and go Refrigerated Display Unit Details	
BP159-LEC-SHD-CIV-000075	Grab and go Display Unit Location	

Contractor's Authorized Representative Name	Omar Soliman Technical Manager	Signature and Stamp

Contractor's Statement: ***We certify that the shop drawings drawings submitted herewith is prepared in details and reflects the actual as-built condition of the works and is prepared in compliance with the shop drawings, redline drawings and specifiction except as otherwise specfically stated hereabove.***

Received by Engineer's Authorized Representative Name		Signature, Date and Stamp

ENGINEER'S COMMENTS

Hardcopies - Date Received by Engineer		Incoming Ref. No., if applicable (to be filled by RE)	

- See comments on the attached drwaings.. (Client comments in blue)
- The wall (partition) between (Grab & Go) and Service Counter to be same width of existing wall between corridor & storage unit- Also, required lintel to be provided same height 2500 mm.as per schematic design
- Subject to no cost and time impact.
- Hinges for storage unit to be Stainless steel & full opening not 90 degree.
- Size details for the (Grab & Go mechin) has to be provided by Kitchen supplier.
- Removable louver details is not clear/readable specially on plan.
- Sequence of installation for storage unit (carcass) and top marble ST-01 and wall tiles to be considered (carefully) to avoid any damage for storage unit.
- The wall tile CT-01 to be installed for 2 sides walls also - i.e. not only for front wall.

ENGINEER'S APPROVAL STATUS	☐ Code 1 ☒ Code 2 ☐ Code 3 ☐ Code 4 ☐ For Information Only	
Reviewed by Engineer's Technical Team (Name and Position)	- Subject to no cost and time impact	Signature, Date
Engineer's Authorized Representative Name	Qussay Al Asaad 05.01.2022	Signature, Date and Stamp
Outgoing Ref. No., if applicable (to be filled by RE)		

CONTRACTOR RECEIVED SIGNATURE

Contractor's Authorized Representative Name		Signature and Stamp

DOCUMENT STATUS
Code 1 - Approved.
Code 2 - Approved as noted, work may proceed subject to incorporation of comments indicated.
Code 3 - Revise & resubmit.
Code 4 - Rejected
Corrections or comments made relative to submittals during this review do not relieve the contractor from compliance with the contract requirements and specfications.
Any amendments to this form should be approved by the Engineer and Dubai South prior to use by the contractor.

DUBAI SOUTH / AL BURJ Engineering Consultants / LOOTAH ENGINEERING AND CONSTRUCTION	DESIGN & BUILD OF THE NOLUS	SHOP DRAWING SUBMITTAL	
		Reference No.	BP159-LEC-SHD-CIV-000029
	RFP 159/BP/21 in Bussines Park of Dubai South	Rev. No	0
		Date Submitted	04-Jan-22
Originator of Submittal	LOOTAH ENGINEERING AND CONSTRUCTION LLC	No. of hardcopies	Soft copy

REFERENCE NUMBER	DRAWING TITLE	DESCRIPTION
BP159-LEC-SHD-CIV-000076	Hung Shelf Details	
BP159-LEC-SHD-CIV-000077	Grab and Go Area Metal Ceiling Details	

Contractor's Authorized Representative Name	Omar Soliman Technical Manager	Signature and Stamp

Contractor's Statement: ***We certify that the shop drawings drawings submitted herewith is prepared in details and reflects the actual as-built condition of the works and is prepared in compliance with the shop drawings, redline drawings and specifiction except as otherwise specfically stated hereabove.***

Received by Engineer's Authorized Representative Name		Signature, Date and Stamp

ENGINEER'S COMMENTS

Hardcopies - Date Received by Engineer		Incoming Ref. No., if applicable (to be filled by RE)	

- See comments on the attached drawings below.
- Measurement to be taken as per site conditions
- Follow Schematic design drawings.
- Subject to no cost and time impact.
- This aproval will not relieve Contractor from his Liability.
- Refer to Client comments on shop drawings (Grab & Go) BP159-LEC-SHD-CIV-000028.
- Suspension around metal shelf to be tube pipes.
- Subject to no cost and time impact
- Approval will not relieve Contractor from his liability.

ENGINEER'S APPROVAL STATUS	☐ Code 1 ☒ Code 2 ☐ Code 3 ☐ Code 4 ☐ For Information Only	
Reviewed by Engineer's Technical Team (Name and Position)		Signature, Date
Engineer's Authorized Representative Name	Qussay Al Asaad 06.01.2022	Signature, Date and Stamp
Outgoing Ref. No., if applicable (to be filled by RE)		

CONTRACTOR RECEIVED SIGNATURE

Contractor's Authorized Representative Name		Signature and Stamp

DOCUMENT STATUS
Code 1 - Approved.
Code 2 - Approved as noted, work may proceed subject to incorporation of comments indicated.
Code 3 - Revise & resubmit.
Code 4 - Rejected
Corrections or comments made relative to submittals during this review do not relieve the contractor from compliance with the contract requirements and specfications.
Any amendments to this form should be approved by the Engineer and Dubai South prior to use by the contractor.

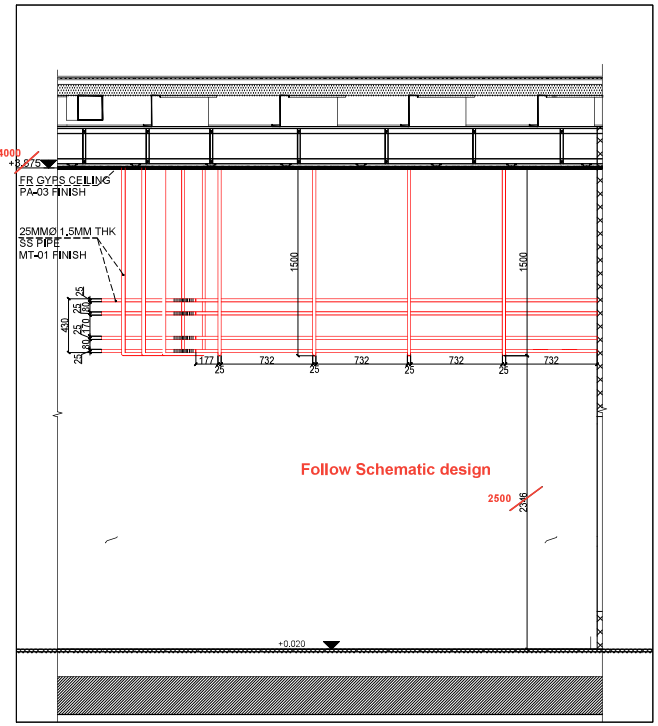

2 ELEVATION A
Scale 1 : 20

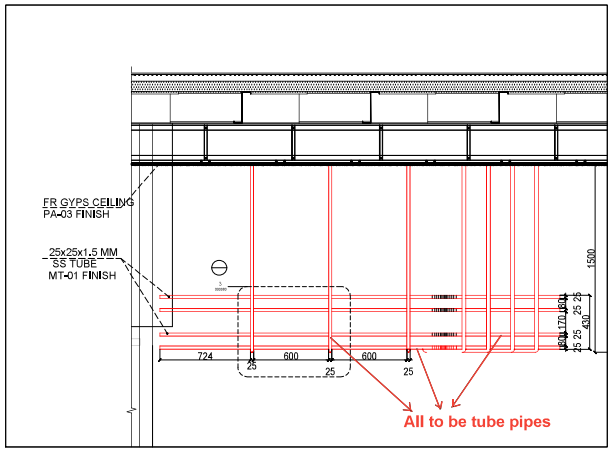

3 ELEVATION B
Scale 1 : 20

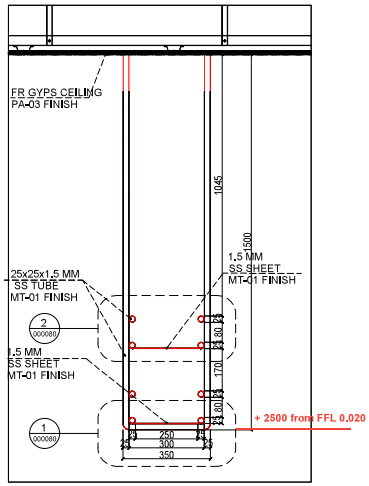

4 SECTION A
Scale 1 : 20

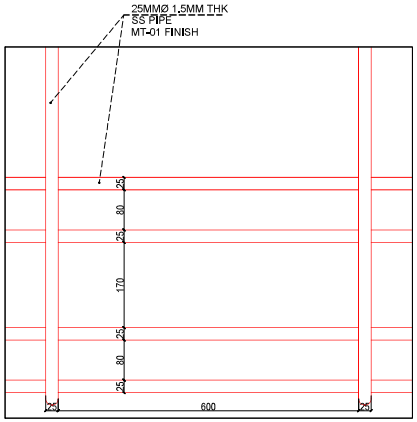

7 DETAIL 3
Scale 1 : 5

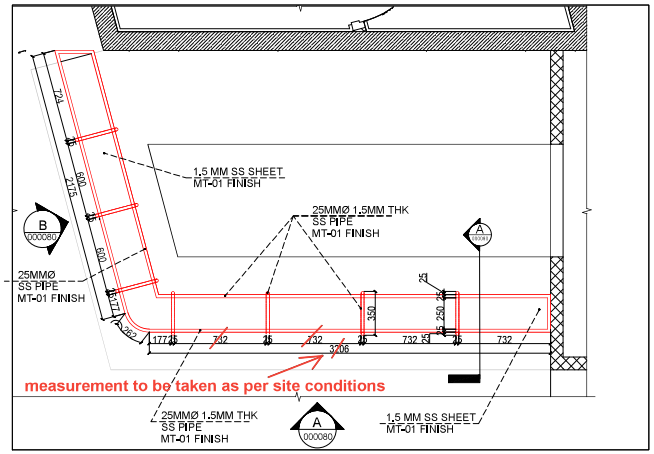

1 PLAN
Scale 1 : 20

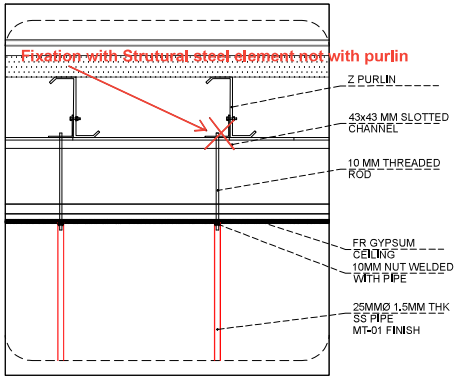

8 HUNG SHELF FIXING DETAIL
Scale 1 : 10

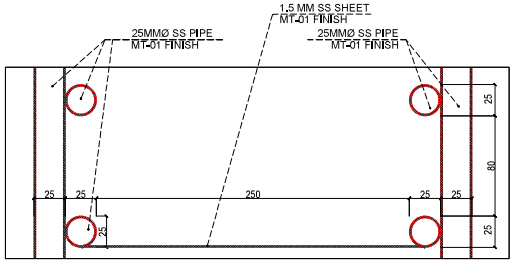

5 DETAIL 2
Scale 1 : 2

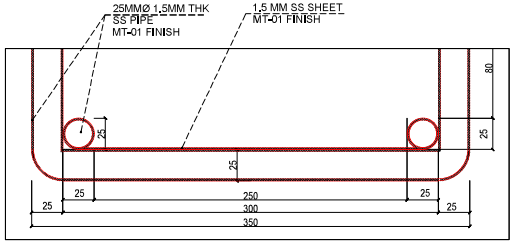

6 DETAIL 1
Scale 1 : 2

KEY PLAN:

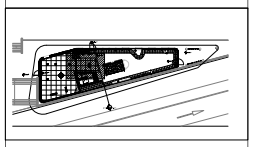

GENERAL NOTES:

1. DO NOT SCALE FROM THIS DRAWING.
2. ALL DIMENSIONS ARE IN MILLIMETERS. LEVELS ARE IN METERS UNLESS NOTED OTHERWISE.
3. THIS DRAWING SHOULD BE READ IN CONJUCTION WITH OTHER RELEVANT ARCHITECTURAL, STRUCTURAL, MECHANICAL & ELECTRICAL DRAWINGS AND SECTIONS OF THE SPECIFICATIONS.

REV	DATE	DETAIL
0	29/12/2021	FIRST ISSUE FOR APPROVAL

CONSULTANT:

yaghmour architects planners engineers

CLIENT:

DUBAI SOUTH

SUPERVISION CONSULTANT:

AL BURJ Engineering Consultants

MAIN CONTRACTOR:

LOOTAH ENGINEERING AND CONSTRUCTION

ID CONTRACTOR:

REVOREN
www.revorengroup.com
info@revorengroup.com

PROJECT NAME:

DESIGN & BUILD OF THE NOLUS IN BUSINESS PARK SOUTH DUBAI,UAE

TITLE:

HUNG SHELF DETAILS

		DATE
DRAWN BY	MUSTHAFA	29-12-2021
CHECKED BY	SARA	
APPROVED BY	SARA	
SCALE	A1 / A3 SHOWN	
DRAWING NUMBER		REV
BP159-LEC-SHD-CIV-000076		0

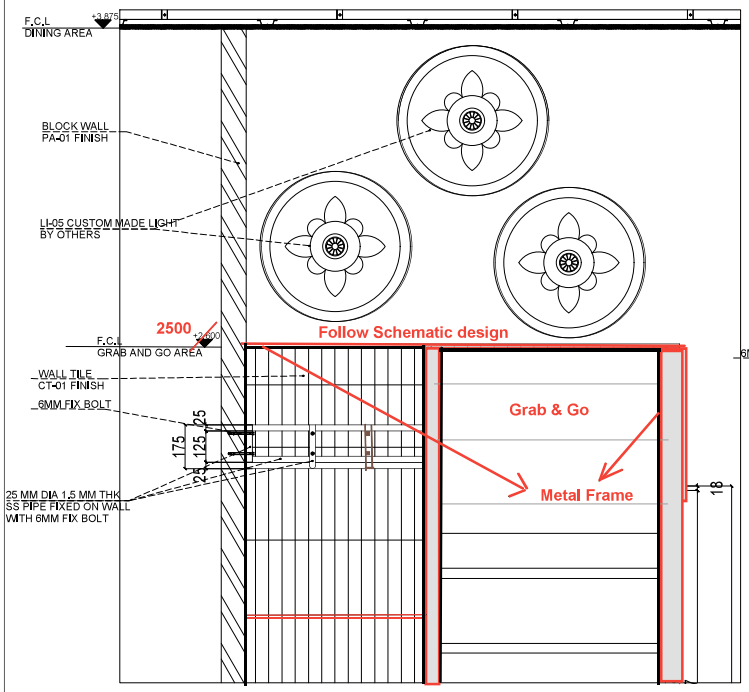

2 ELEVATION A
Scale 1 : 10

Refer to Client comments on shop drawings of (Grab & Go) Ref. No. BP159-LEC-SHD-CIV-000028

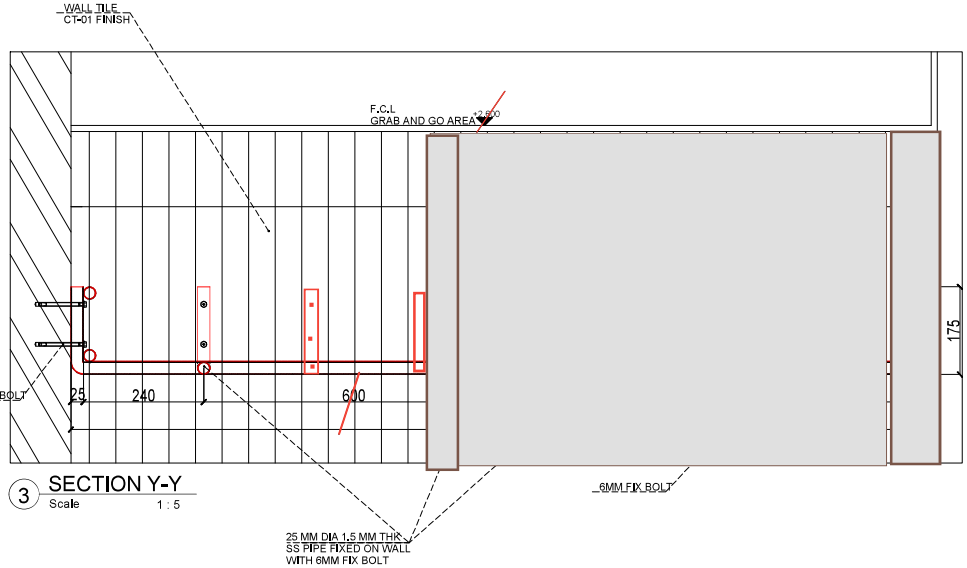

3 SECTION Y-Y
Scale 1 : 5

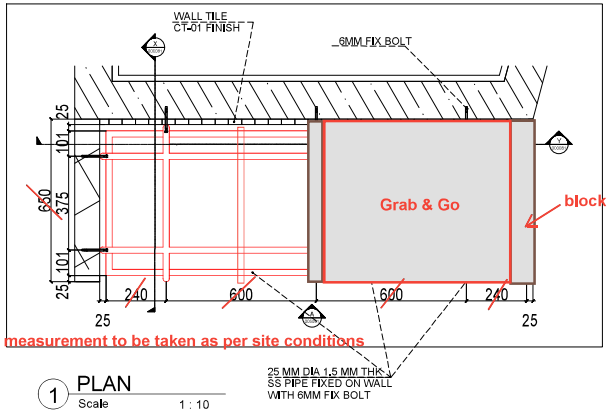

1 PLAN
Scale 1 : 10

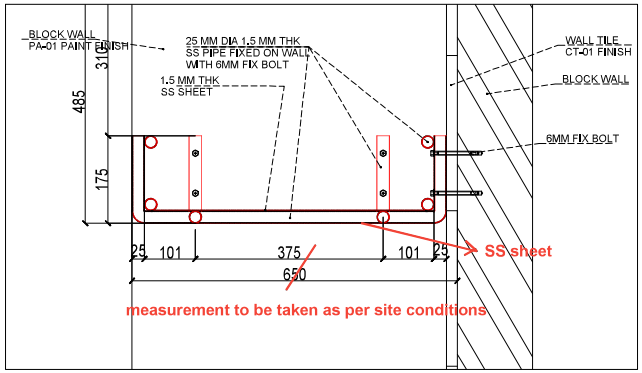

4 SECTION X-X
Scale 1 : 5

KEY PLAN:

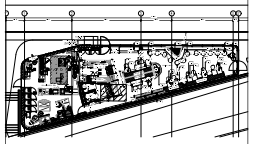

GENERAL NOTES:

1. DO NOT SCALE FROM THIS DRAWING.
2. ALL DIMENSIONS ARE IN MILLIMETERS. LEVELS ARE IN METERS UNLESS NOTED OTHERWISE.
3. THIS DRAWING SHOULD BE READ IN CONJUCTION WITH OTHER RELEVANT ARCHITECTURAL, STRUCTURAL, MECHANICAL & ELECTRICAL DRAWINGS AND SECTIONS OF THE SPECIFICATIONS.

REV	DATE	DETAIL
0	04/01/2022	FIRST ISSUE FOR APPROVAL

CONSULTANT:

yaghmour architects planners engineers

CLIENT:

DUBAI SOUTH

SUPERVISION CONSULTANT:

AL BURJ Engineering Consultants

MAIN CONTRACTOR:

LOOTAH ENGINEERING AND CONSTRUCTION

ID CONTRACTOR:

REVOREN
www.revorengroup.com
info@revorengroup.com

PROJECT NAME:

DESIGN & BUILD OF THE NOLUS IN BUSINESS PARK SOUTH DUBAI,UAE

TITLE:

GRAB AND GO AREA METAL CEILING DETAILS

		DATE
DRAWN BY	MUSTHAFA	04-01-2022
CHECKED BY	SARA	
APPROVED BY	SARA	
SCALE	A1 / AS SHOWN	
DRAWING NUMBER	BP159-LEC-SHD-CIV-000077	REV 0

DUBAI SOUTH / AL BURJ Engineering Consultants / LOOTAH ENGINEERING AND CONSTRUCTION	DESIGN & BUILD OF THE NOLUS	SHOP DRAWING SUBMITTAL	
		Reference No.	BP159-LEC-SHD-CIV-000030
	RFP 159/BP/21 in Bussines Park of Dubai South	Rev. No	0
		Date Submitted	10-Jan-22
Originator of Submittal	LOOTAH ENGINEERING AND CONSTRUCTION LLC	No. of hardcopies	Soft copy

REFERENCE NUMBER	DRAWING TITLE	DESCRIPTION
BP159-LEC-SHD-CIV-000078	Service Counter Detail-1	
BP159-LEC-SHD-CIV-000079	Service Counter Detail-2	

Contractor's Authorized Representative Name	Omar Soliman Technical Manager	Signature and Stamp

Contractor's Statement: ***We certify that the shop drawings drawings submitted herewith is prepared in details and reflects the actual as-built condition of the works and is prepared in compliance with the shop drawings, redline drawings and specifiction except as otherwise specfically stated hereabove.***

Received by Engineer's Authorized Representative Name		Signature, Date and Stamp

ENGINEER'S COMMENTS

Hardcopies - Date Received by Engineer		Incoming Ref. No., if applicable (to be filled by RE)	

- See comments on the below drawings.
- Also, please find comments below from kitchen supplier
- See groove location on below drawings. Also, as client mark on \grab & Go shop drawings
- Contractor has to mark service counter at site for final approval
- Backsplash to be provided as commented on the below drawings.
- Skirting to be 70 mm
- The plinths and skirting has to be continues even where the equipment are there
- The terminations has to be carefully done for openings
- Subject to no cost and time impact.
- This approval not relieve Contractor from his liability.

ENGINEER'S APPROVAL STATUS	☐ Code 1 ☒ Code 2 ☐ Code 3 ☐ Code 4 ☐ For Information Only	
Reviewed by Engineer's Technical Team (Name and Position)		Signature, Date
Engineer's Authorized Representative Name	Qussay Al Asaad 12.01.2022	Signature, Date and Stamp
Outgoing Ref. No., if applicable (to be filled by RE)		

CONTRACTOR RECEIVED SIGNATURE

Contractor's Authorized Representative Name		Signature and Stamp

DOCUMENT STATUS
Code 1 - Approved.
Code 2 - Approved as noted, work may proceed subject to incorporation of comments indicated.
Code 3 - Revise & resubmit.
Code 4 - Rejected
Corrections or comments made relative to submittals during this review do not relieve the contractor from compliance with the contract requirements and specfications.
Any amendments to this form should be approved by the Engineer and Dubai South prior to use by the contractor.

DUBAI SOUTH / AL BURJ Engineering Consultants / LOOTAH Engineering and Construction	DESIGN & BUILD OF THE NOLUS	SHOP DRAWING SUBMITTAL	
		Reference No.	BP159-LEC-SHD-CIV-000016
	RFP 159/BP/21 in Bussines Park of Dubai South	Rev. No	0
		Date Submitted	13-Dec-21
Originator of Submittal	LOOTAH ENGINEERING AND CONSTRUCTION LLC	No. of hardcopies	Soft copy

REFERENCE NUMBER	DRAWING TITLE	DESCRIPTION
BP159-LEC-SHD-CIV-000022	BOH Kitchen Layout @ Ground Floor	
BP159-LEC-SHD-CIV-000023	Tiling Sectional Elevation # 01 & 02	
BP159-LEC-SHD-CIV-000024	Tiling Sectional Elevation # 03 & 04	
BP159-LEC-SHD-CIV-000039	Tiling Sectional Elevation # 05 & 06	

Contractor's Authorized Representative Name	Omar Soliman Technical Manager	Signature and Stamp

Contractor's Statement: ***We certify that the shop drawings drawings submitted herewith is prepared in details and reflects the actual as-built condition of the works and is prepared in compliance with the shop drawings, redline drawings and specifiction except as otherwise specfically stated hereabove.***

Received by Engineer's Authorized Representative Name		Signature, Date and Stamp

ENGINEER'S COMMENTS

Hardcopies - Date Received by Engineer		Incoming Ref. No., if applicable (to be filled by RE)	

Contractor is mandatory has to submit final details drawings comply with below comments:

- **Small cut piece not acceptable.**
- **Open size (90 x 70 cm) between kitchen and bar to be added and consider into shop drawings.**
- **block wall for sink to be added and consider into shop drawings.**
- **Detail plans big scale at the 2 curves to be provided, to make sure that tile 30x30cm can round, and not need visable as a sigmented.**
- **S.O.P at some elevations are not clear.**
- Just make sure corner profile is there .
- Termination at door and window are provided
- Tiles should go above the ceiling with shadow gap detail

ENGINEER'S APPROVAL STATUS	☐ Code 1	☐ Code 2	☐ Code 3	☐ Code 4	☐ For Information Only
Reviewed by Engineer's Technical Team (Name and Position)					Signature, Date
Engineer's Authorized Representative Name	Qussay Al Asaad 14.12.2021				Signature, Date and Stamp
Outgoing Ref. No., if applicable (to be filled by RE)					

CONTRACTOR RECEIVED SIGNATURE

Contractor's Authorized Representative Name		Signature and Stamp

DOCUMENT STATUS
Code 1 - Approved.
Code 2 - Approved as noted, work may proceed subject to incorporation of comments indicated.
Code 3 - Revise & resubmit.
Code 4 - Rejected
Corrections or comments made relative to submittals during this review do not relieve the contractor from compliance with the contract requirements and specfications.
Any amendments to this form should be approved by the Engineer and Dubai South prior to use by the contractor.

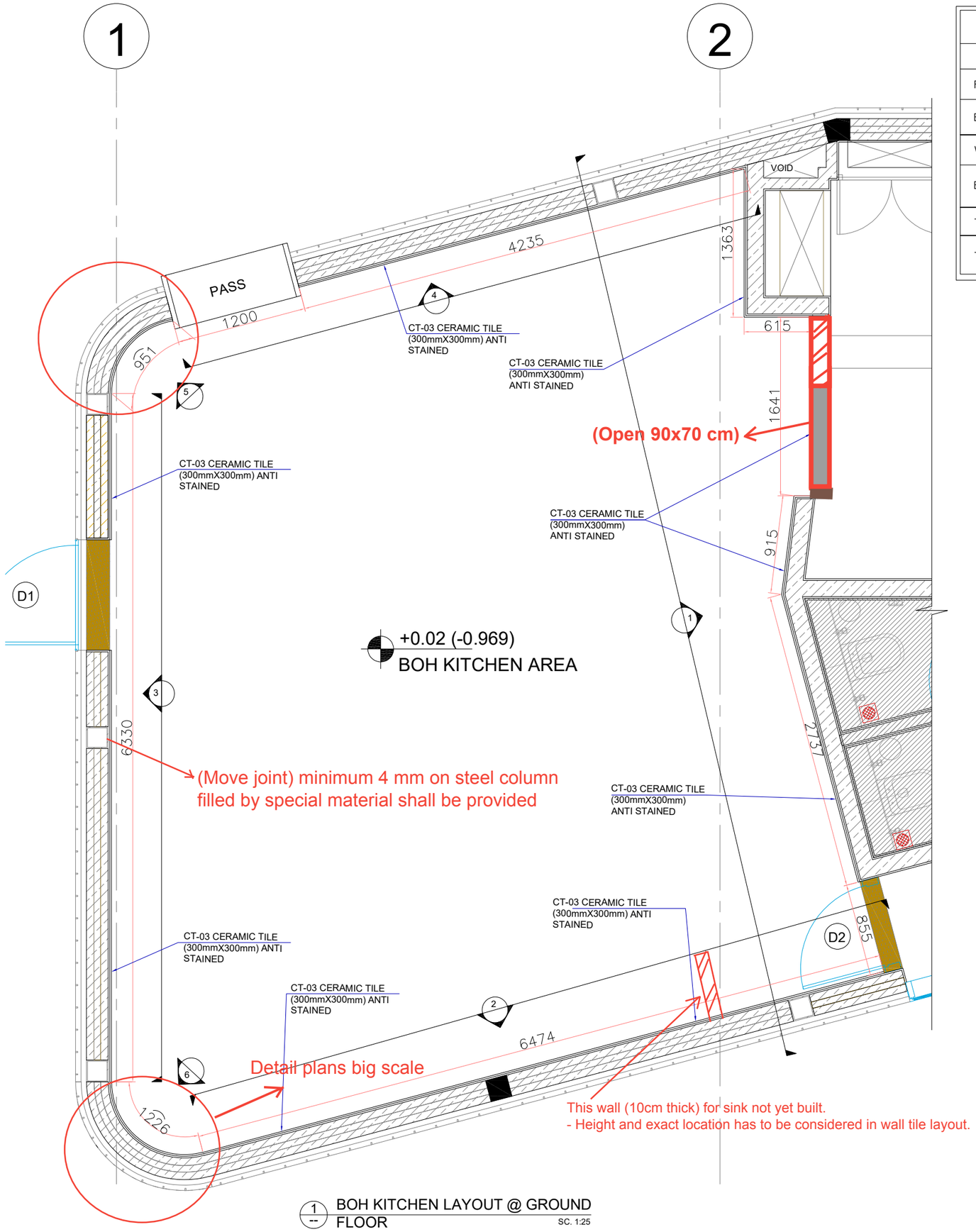

1 -- BOH KITCHEN LAYOUT @ GROUND FLOOR
SC. 1:25

TABLE OF FINISHES (TOILET AREA)		
AREA	FINISH CODE	DESCRIPTION
FLOOR FINISHES		
BOH KITCHEN	FL.04	ANTI SLIP FLOORING PLEXICOAT NMA RESIN SYSTEMS RAL 7040 WINDOW GREY SEALED (MINIMUM R11 SLIP RATING)
WALL FINISHES		
BOH KITCHEN	CT.03	300mmX300mm CERAMIC TILE ANTI STAINED, COLOUR WHITE
THRESHOLD		
THREESHOLD	TH.01	30mm Thk. THRESHOLD (LIGHT GRANITE GREY SEALED, POLISHED) (COLOR TO MATCH ST-01)

KEY PLAN:

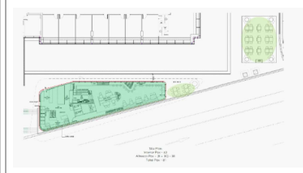

GENERAL NOTES:

1. DO NOT SCALE FROM THIS DRAWING.
2. ALL DIMENSIONS ARE IN MILLIMETERS, LEVELS ARE IN METERS UNLESS NOTED OTHERWISE.
3. THIS DRAWING SHOULD BE READ IN CONJUNCTION WITH OTHER RELEVANT ARCHITECTURAL, STRUCTURAL, MECHANICAL & ELECTRICAL DRAWINGS AND SECTIONS OF THE SPECIFICATIONS.

Rev	Date	Description	Drawn	Chkd	Appr
R0	12.12.2021	ISSUED FOR APPROVAL	AG	OS	OS

REVISION HISTORY

SHOP DRAWING

PROJECT TITLE:
RFP 159/BP/21
DESIGN & BUILD OF THE NOLU'S IN RESIDENTIAL DISTRICT
DUBAI SOUTH, DUBAI UAE

CLIENT : DUBAI SOUTH

DESIGN CONSULTANT : yaghmour architects planners engineers

SUPERVISION CONSULTANT : AL BURJ Engineering Consultants — ARCHITECTS - ENGINEERS - PLANNERS

MAIN CONTRACTOR : LOOTAH ENGINEERING AND CONSTRUCTION

DRAWING TITLE :
BOH KITCHEN LAYOUT @ GROUND FLOOR

DRAWN	CHECKED	APPROVED	PAPER SIZE	SCALE
AMIR	OMAR	OMAR	A3	As shown

PROJECT NO:	DATE	DRAWING NO	REV
BP159	12.12.2021	BP159-LEC-SHD-CIV-000022-PDF	R0

Consultant Remarks

- [ ] Approved
- [ ] Approved as Noted
- [ ] Approved as Noted, Resubmit
- [ ] Not Required
- [ ] Not Approved

Consultant's Signature

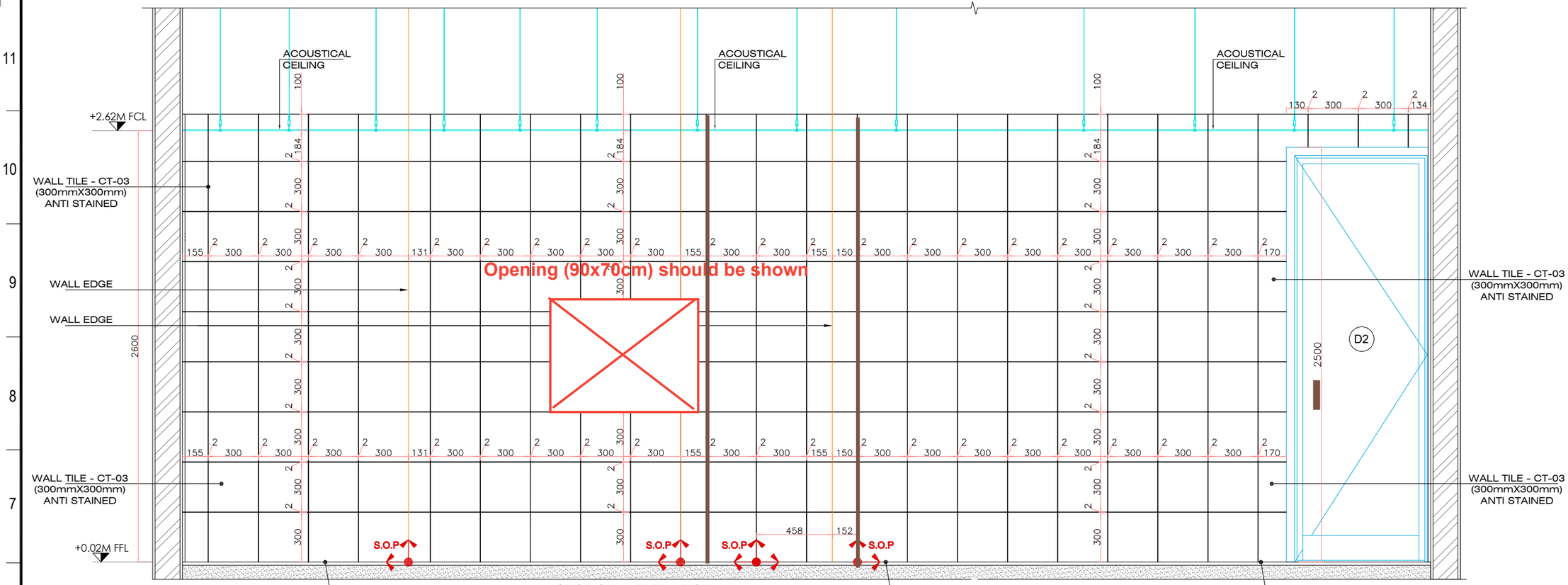

2 SECTIONAL ELEVATION - 01
SC. 1:25

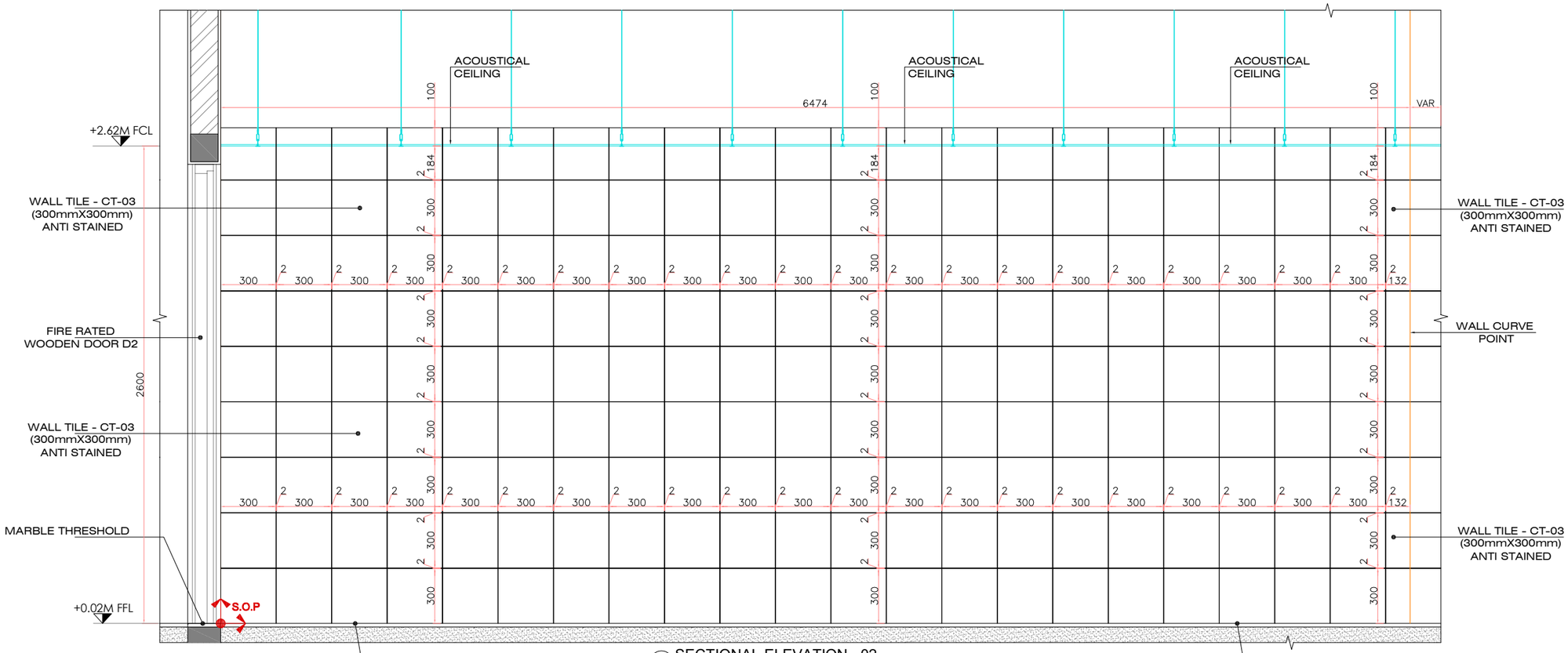

3 SECTIONAL ELEVATION - 02
SC. 1:25

KEY PLAN:

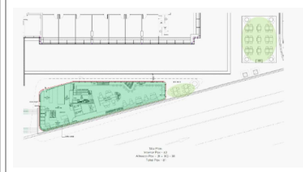

GENERAL NOTES:

1. DO NOT SCALE FROM THIS DRAWING.
2. ALL DIMENSIONS ARE IN MILLIMETERS, LEVELS ARE IN METERS UNLESS NOTED OTHERWISE.
3. THIS DRAWING SHOULD BE READ IN CONJUNCTION WITH OTHER RELEVANT ARCHITECTURAL, STRUCTURAL, MECHANICAL & ELECTRICAL DRAWINGS AND SECTIONS OF THE SPECIFICATIONS.

Consultant Remarks

- ☐ Approved
- ☐ Approved as Noted
- ☐ Approved as Noted, Resubmit
- ☐ Not Required
- ☐ Not Approved

Consultant's Signature

Rev	Date	Description	Drawn	Chkd	Appr
R0	12.12.2021	ISSUED FOR APPROVAL	AG	OS	OS

REVISION HISTORY

SHOP DRAWING

PROJECT TITLE:
RFP 159/BP/21
DESIGN & BUILD OF THE NOLU'S IN RESIDENTIAL DISTRICT
DUBAI SOUTH, DUBAI UAE

CLIENT : DUBAI SOUTH

DESIGN CONSULTANT : yaghmour architects planners engineers

SUPERVISION CONSULTANT : AL BURJ Engineering Consultants

MAIN CONTRACTOR : LOOTAH ENGINEERING AND CONSTRUCTION

DRAWING TITLE :

TILING SECTIONAL ELEVATION # 01 & 02

DRAWN	CHECKED	APPROVED	PAPER SIZE	SCALE
AMIR	OMAR	OMAR	A3	As shown

PROJECT NO:	DATE	DRAWING NO	REV
BP159	12.12.2021	BP159-LEC-SHD-CIV-000023-PDF	R0

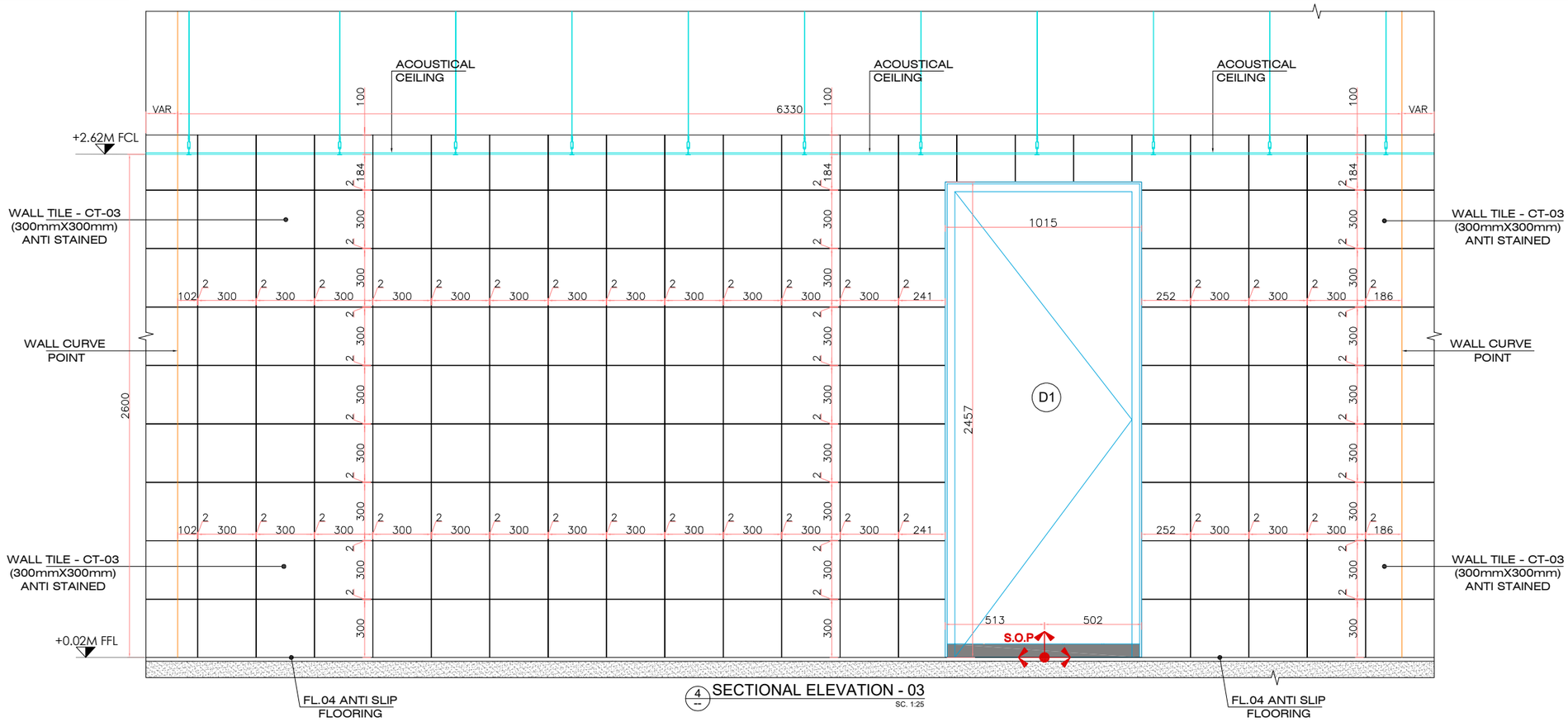

4 SECTIONAL ELEVATION - 03
SC. 1:25

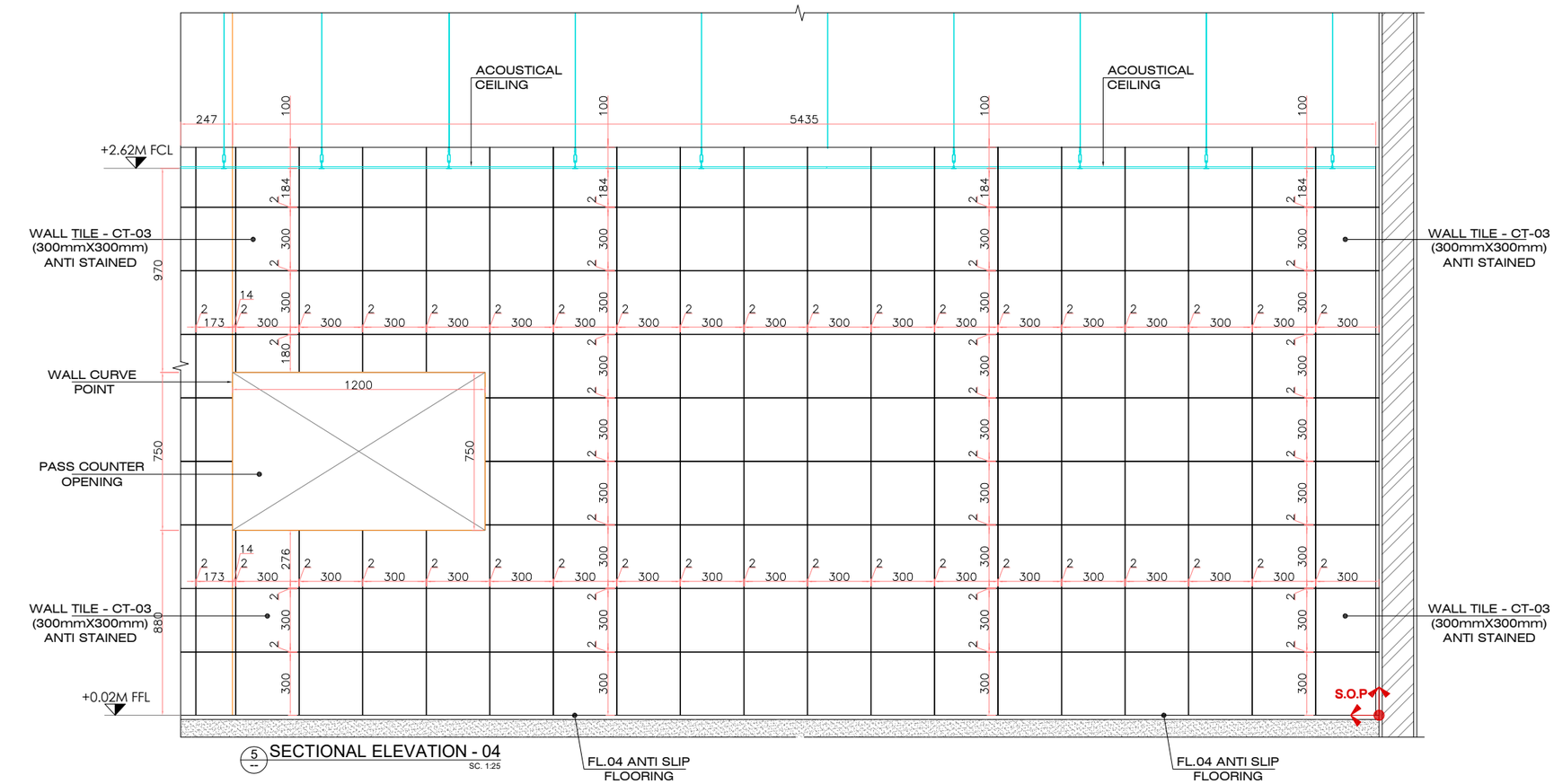

5 SECTIONAL ELEVATION - 04
SC. 1:25

KEY PLAN:

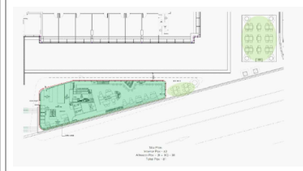

GENERAL NOTES:

1. DO NOT SCALE FROM THIS DRAWING.
2. ALL DIMENSIONS ARE IN MILLIMETERS, LEVELS ARE IN METERS UNLESS NOTED OTHERWISE.
3. THIS DRAWING SHOULD BE READ IN CONJUNCTION WITH OTHER RELEVANT ARCHITECTURAL, STRUCTURAL, MECHANICAL & ELECTRICAL DRAWINGS AND SECTIONS OF THE SPECIFICATIONS.

Consultant Remarks

- ☐ Approved
- ☐ Approved as Noted
- ☐ Approved as Noted, Resubmit
- ☐ Not Required
- ☐ Not Approved

Consultant's Signature

Rev	Date	Description	Drawn	Chkd	Appr
R0	12.12.2021	ISSUED FOR APPROVAL	AG	OS	OS

REVISION HISTORY

SHOP DRAWING

PROJECT TITLE:
RFP 159/BP/21
DESIGN & BUILD OF THE NOLU'S IN RESIDENTIAL DISTRICT
DUBAI SOUTH, DUBAI UAE

CLIENT : DUBAI SOUTH

DESIGN CONSULTANT : yaghmour architects planners engineers

SUPERVISION CONSULTANT : AL BURJ Engineering Consultants

MAIN CONTRACTOR : LOOTAH ENGINEERING AND CONSTRUCTION

DRAWING TITLE :

TILING SECTIONAL ELEVATION # 03 & 04

DRAWN	CHECKED	APPROVED	PAPER SIZE	SCALE
AMIR	OMAR	OMAR	A3	As shown

PROJECT NO:	DATE	DRAWING NO	REV
BP159	07.12.2021	BP159-LEC-SHD-CIV-000024-PDF	R0

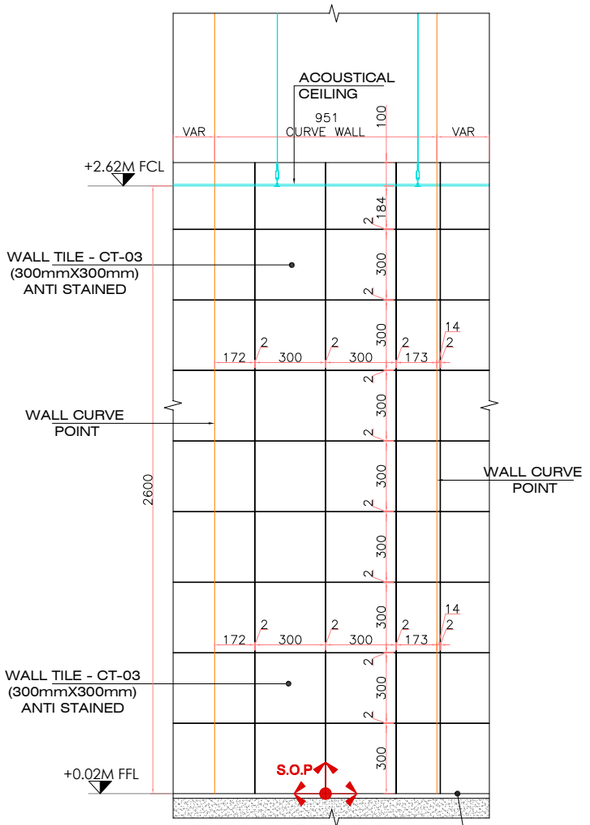

6 SECTIONAL ELEVATION - 05
SC. 1:25

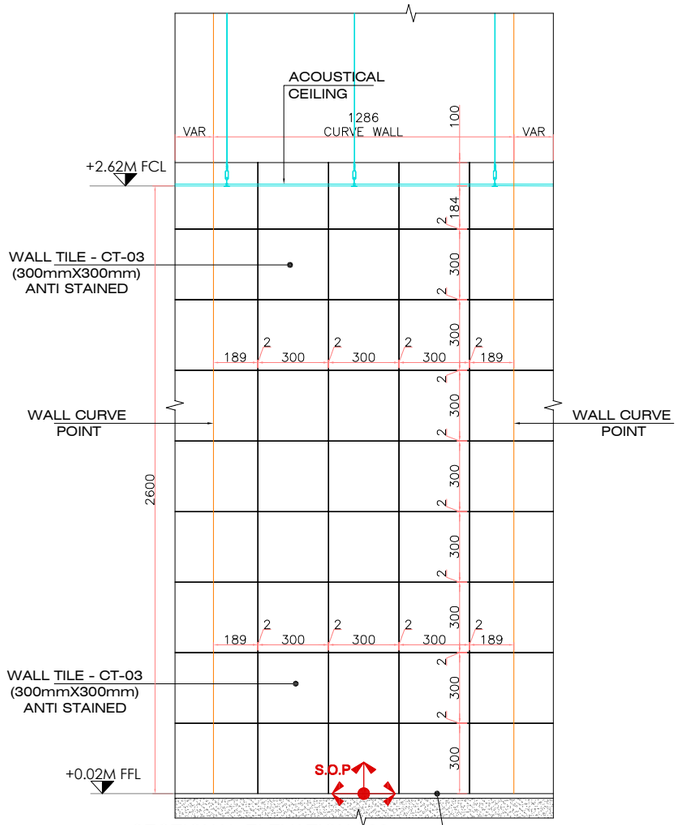

6 SECTIONAL ELEVATION - 06
SC. 1:25

Detail plans big scale at the 2 curves to be provided.
to make sure that tile 30x30cm can round, and not need visable as a sigmented.

KEY PLAN:

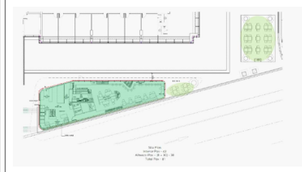

GENERAL NOTES:

1. DO NOT SCALE FROM THIS DRAWING.
2. ALL DIMENSIONS ARE IN MILLIMETERS, LEVELS ARE IN METERS UNLESS NOTED OTHERWISE.
3. THIS DRAWING SHOULD BE READ IN CONJUNCTION WITH OTHER RELEVANT ARCHITECTURAL, STRUCTURAL, MECHANICAL & ELECTRICAL DRAWINGS AND SECTIONS OF THE SPECIFICATIONS.

Consultant Remarks

- ☐ Approved
- ☐ Approved as Noted
- ☐ Approved as Noted, Resubmit
- ☐ Not Required
- ☐ Not Approved

Consultant's Signature

Rev	Date	Description	Drawn	Chkd	Appr
R0	12.12.2021	ISSUED FOR APPROVAL	AG	OS	OS

REVISION HISTORY

SHOP DRAWING

PROJECT TITLE:
RFP 159/BP/21
DESIGN & BUILD OF THE NOLU'S IN RESIDENTIAL DISTRICT
DUBAI SOUTH, DUBAI UAE

CLIENT : DUBAI SOUTH

DESIGN CONSULTANT : yaghmour architects planners engineers

SUPERVISION CONSULTANT : AL BURJ Engineering Consultants — ARCHITECTS - ENGINEERS - PLANNERS

MAIN CONTRACTOR : LOOTAH ENGINEERING AND CONSTRUCTION

DRAWING TITLE :

TILING SECTIONAL ELEVATION # 05 & 06

DRAWN	CHECKED	APPROVED	PAPER SIZE	SCALE
AMIR	OMAR	OMAR	A3	As shown

PROJECT NO:	DATE	DRAWING NO	REV
BP159	12.12.2021	BP159-LEC-SHD-CIV-000039-PDF	R0

DUBAI SOUTH / AL BURJ Engineering Consultants / LOOTAH ENGINEERING AND CONSTRUCTION	DESIGN & BUILD OF THE NOLUS	SHOP DRAWING SUBMITTAL	
		Reference No.	BP159-LEC-SHD-CIV-0000009
	RFP 159/BP/21 in Bussines Park of Dubai South	Rev. No	0
		Date Submitted	06-Dec-21
Originator of Submittal	LOOTAH ENGINEERING AND CONSTRUCTION LLC	No. of hardcopies	Soft copy

REFERENCE NUMBER	DRAWING TITLE	DESCRIPTION
BP159-LEC-SHD-CIV-000036	Seating Area Floor Tiling Layout & Section Detail	
BP159-LEC-SHD-CIV-000037	Seating Area Floor Tiling Layout & Section Detail	

Contractor's Authorized Representative Name	Omar Soliman Technical Manager	Signature and Stamp

Contractor's Statement: ***We certify that the shop drawings drawings submitted herewith is prepared in details and reflects the actual as-built condition of the works and is prepared in compliance with the shop drawings, redline drawings and specifiction except as otherwise specfically stated hereabove.***

Received by Engineer's Authorized Representative Name		Signature, Date and Stamp

ENGINEER'S COMMENTS

Hardcopies - Date Received by Engineer		Incoming Ref. No., if applicable (to be filled by RE)	

1.) See comments on the below drawings
2.) cut pieces as highlighted on drawing need to provide mock-up for approval.
3. Joints betwee tiles to be same joints on tiles designs.

ENGINEER'S APPROVAL STATUS	☐ Code 1 ☐ Code 2 ☐ Code 3 ☐ Code 4 ☐ For Information Only	
Reviewed by Engineer's Technical Team (Name and Position)		Signature, Date
Engineer's Authorized Representative Name	Qussay Al Asaad 06.12.2021	Signature, Date and Stamp
Outgoing Ref. No., if applicable (to be filled by RE)		

CONTRACTOR RECEIVED SIGNATURE

Contractor's Authorized Representative Name		Signature and Stamp

DOCUMENT STATUS
Code 1 - Approved.
Code 2 - Approved as noted, work may proceed subject to incorporation of comments indicated.
Code 3 - Revise & resubmit.
Code 4 - Rejected
Corrections or comments made relative to submittals during this review do not relieve the contractor from compliance with the contract requirements and specfications.
Any amendments to this form should be approved by the Engineer and Dubai South prior to use by the contractor.

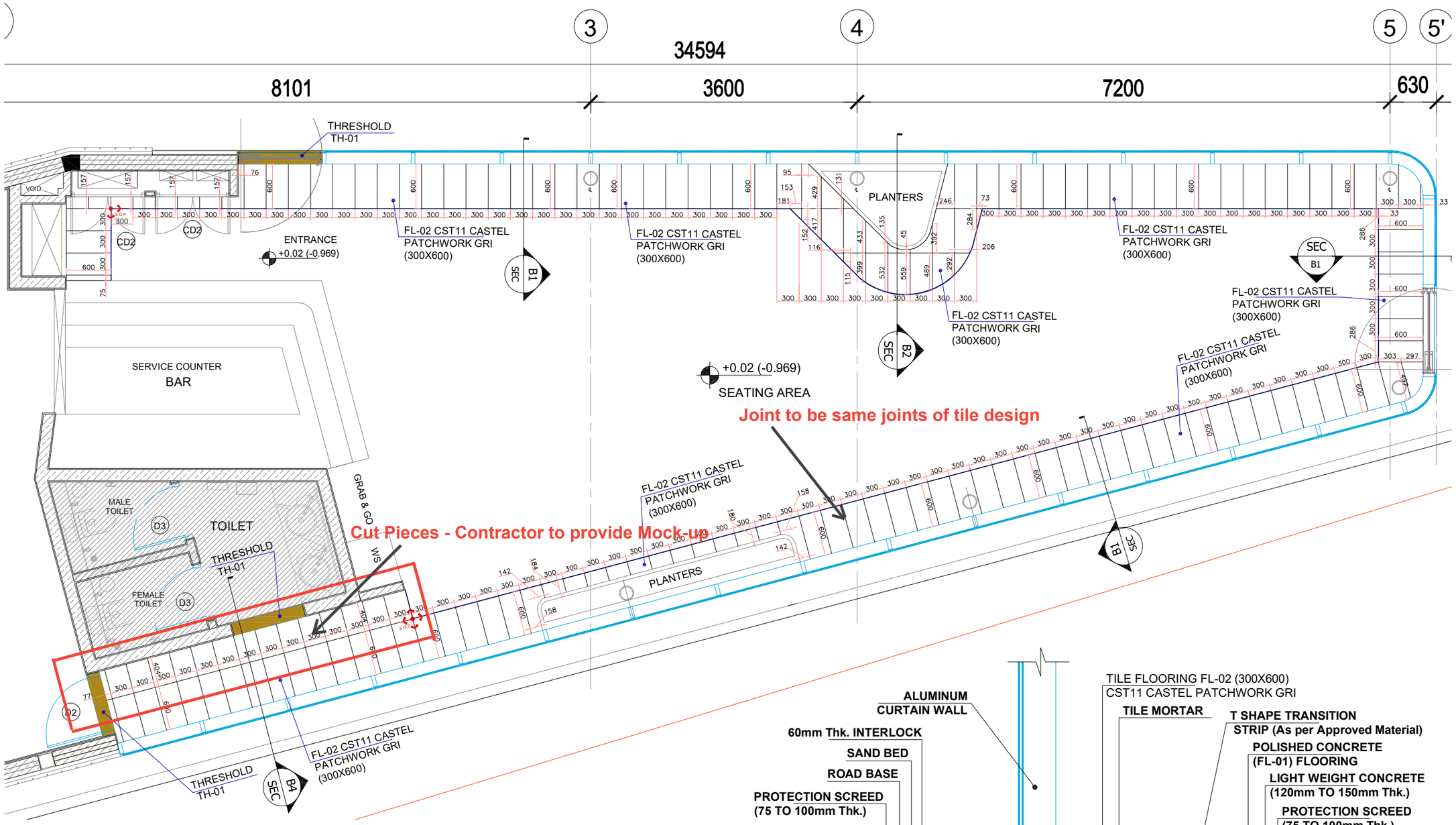

TABLE OF FINISHES (SEATING AREA)		
AREA	FINISH CODE	DESCRIPTION
FLOOR FINISHES		
SEATING AREA	FL-02	300X600MM FEATURING FLOORING - CASTEL PATCHWORK GRI GLAZED GRANITE BLACK WHITE MATTE
THREESHOLD		
SEATING AREA	TH-01	30mm Thk. THRESHOLD (LIGHT GRANITE GREY SEALED, POLISHED) (COLOR TO MATCH ST-01)

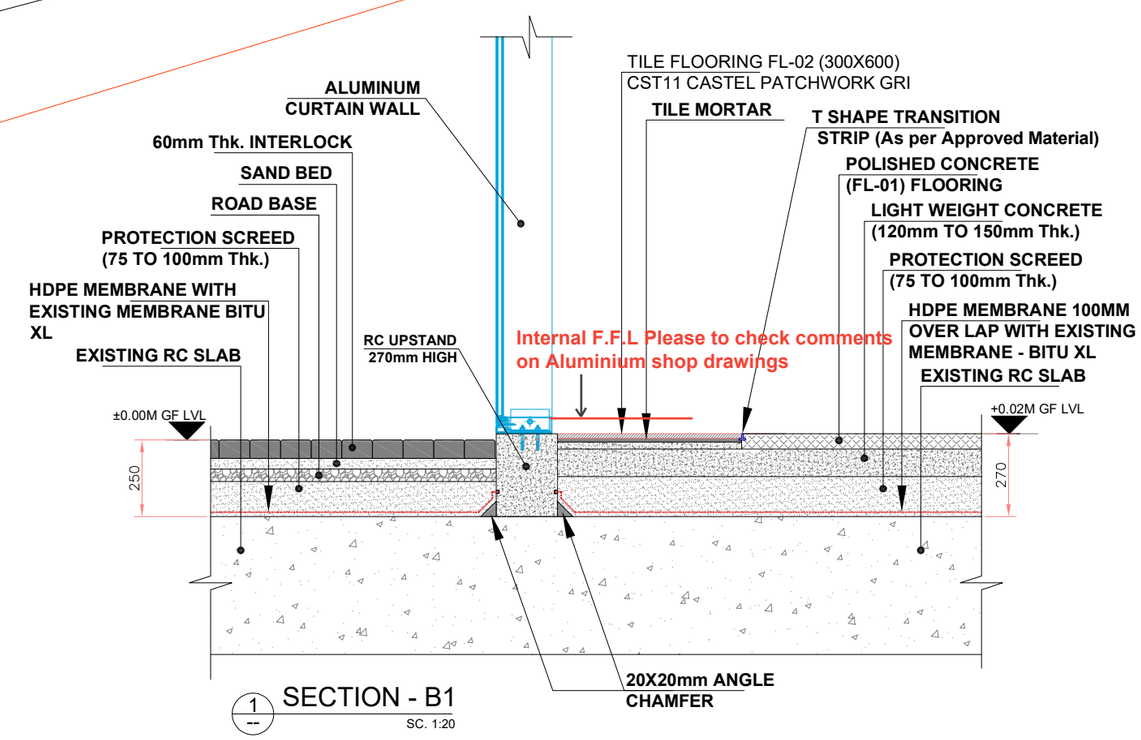

1 SECTION - B1
SC. 1:20

KEY PLAN:

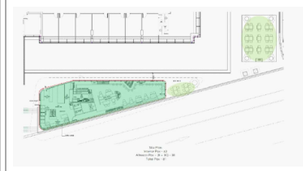

GENERAL NOTES:

1. DO NOT SCALE FROM THIS DRAWING.
2. ALL DIMENSIONS ARE IN MILLIMETERS, LEVELS ARE IN METERS UNLESS NOTED OTHERWISE.
3. THIS DRAWING SHOULD BE READ IN CONJUNCTION WITH OTHER RELEVANT ARCHITECTURAL, STRUCTURAL, MECHANICAL & ELECTRICAL DRAWINGS AND SECTIONS OF THE SPECIFICATIONS.

Consultant Remarks

- ☐ Approved
- ☐ Approved as Noted
- ☐ Approved as Noted, Resubmit
- ☐ Not Required
- ☐ Not Approved

Consultant's Signature

Rev	Date	Description	Drawn	Chkd	Appr
R0	06.12.2021	ISSUED FOR APPROVAL	AG	AK	AK

REVISION HISTORY

SHOP DRAWING

PROJECT TITLE:
RFP 159/BP/21
DESIGN & BUILD OF THE NOLU'S IN RESIDENTIAL DISTRICT
DUBAI SOUTH, DUBAI UAE

CLIENT : DUBAI SOUTH

DESIGN CONSULTANT : yaghmour architects planners engineers

SUPERVISION CONSULTANT : AL BURJ Engineering Consultants

MAIN CONTRACTOR : LOOTAH ENGINEERING AND CONSTRUCTION

DRAWING TITLE :
SEATING AREA
FLOOR TILING LAYOUT & SECTION DETAIL

DRAWN	CHECKED	APPROVED	PAPER SIZE	SCALE
AMIR	OMAR	OMAR	A3	As shown

PROJECT NO:	DATE	DRAWING NO	REV
BP159	06.12.2021	BP159-LEC-SHD-CIV-000036-PDF	R0

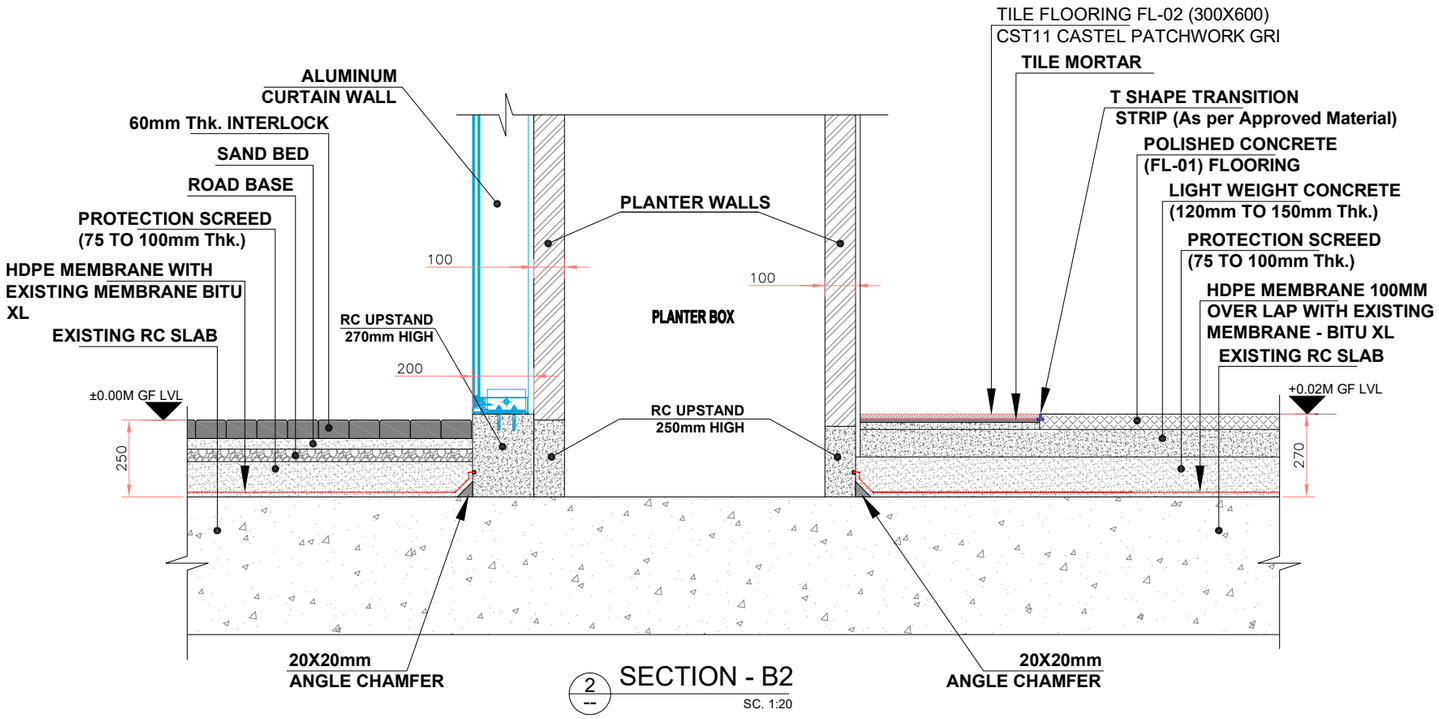

2 -- SECTION - B2
SC. 1:20

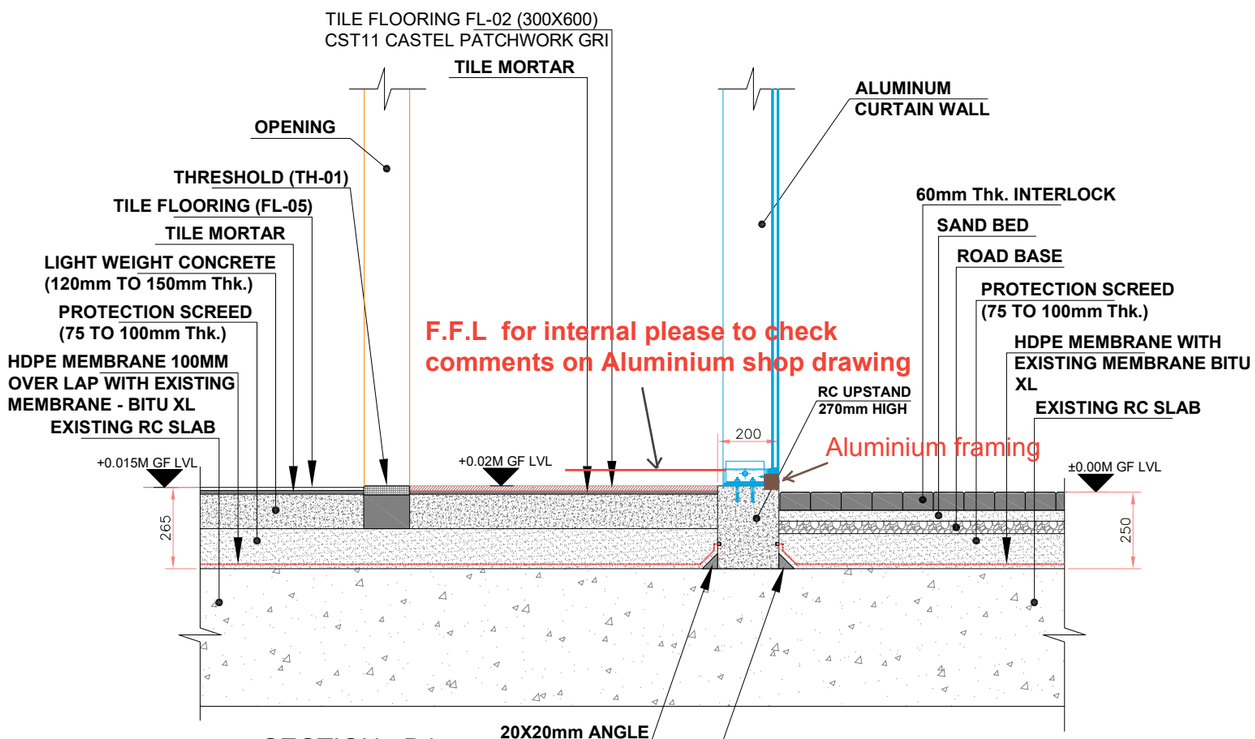

3 -- SECTION - B4
SC. 1:20

KEY PLAN:

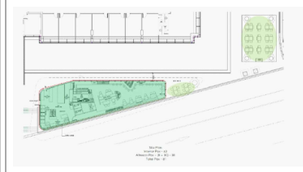

GENERAL NOTES:

1. DO NOT SCALE FROM THIS DRAWING.
2. ALL DIMENSIONS ARE IN MILLIMETERS, LEVELS ARE IN METERS UNLESS NOTED OTHERWISE.
3. THIS DRAWING SHOULD BE READ IN CONJUNCTION WITH OTHER RELEVANT ARCHITECTURAL, STRUCTURAL, MECHANICAL & ELECTRICAL DRAWINGS AND SECTIONS OF THE SPECIFICATIONS.

Consultant Remarks

- ☐ Approved
- ☐ Approved as Noted
- ☐ Approved as Noted, Resubmit
- ☐ Not Required
- ☐ Not Approved

Consultant's Signature

Rev	Date	Description	Drawn	Chkd	Appr
R0	06.12.2021	ISSUED FOR APPROVAL	AG	AK	AK

REVISION HISTORY

SHOP DRAWING

PROJECT TITLE:
RFP 159/BP/21
DESIGN & BUILD OF THE NOLU'S IN RESIDENTIAL DISTRICT
DUBAI SOUTH, DUBAI UAE

CLIENT : DUBAI SOUTH

DESIGN CONSULTANT : yaghmour architects planners engineers

SUPERVISION CONSULTANT : AL BURJ Engineering Consultants — ARCHITECTS - ENGINEERS - PLANNERS

MAIN CONTRACTOR : LOOTAH ENGINEERING AND CONSTRUCTION

DRAWING TITLE :

SEATING AREA
FLOOR TILING LAYOUT & SECTION DETAIL

DRAWN	CHECKED	APPROVED	PAPER SIZE	SCALE
AMIR	OMAR	OMAR	A3	As shown

PROJECT NO:	DATE	DRAWING NO	REV
BP159	06.12.2021	BP159-LEC-SHD-CIV-000037-PDF	R0

DUBAI SOUTH / AL BURJ Engineering Consultants / LOOTAH ENGINEERING AND CONSTRUCTION	DESIGN & BUILD OF THE NOLUS	SHOP DRAWING SUBMITTAL	
		Reference No.	BP159-LEC-SHD-CIV-000027
	RFP 159/BP/21 in Bussines Park of Dubai South	Rev. No	0
		Date Submitted	29-Dec-21
Originator of Submittal	LOOTAH ENGINEERING AND CONSTRUCTION LLC	No. of hardcopies	Soft copy

REFERENCE NUMBER	DRAWING TITLE	DESCRIPTION
BP159-LEC-SHD-CIV-000072	Storage Unit Details	
BP159-LEC-SHD-CIV-000073	Storage Unit Location	

Contractor's Authorized Representative Name	Omar Soliman Technical Manager	Signature and Stamp

Contractor's Statement: ***We certify that the shop drawings drawings submitted herewith is prepared in details and reflects the actual as-built condition of the works and is prepared in compliance with the shop drawings, redline drawings and specifiction except as otherwise specfically stated hereabove.***

Received by Engineer's Authorized Representative Name		Signature, Date and Stamp

ENGINEER'S COMMENTS

Hardcopies - Date Received by Engineer		Incoming Ref. No., if applicable (to be filled by RE)	

1) See comments on the attached shop drawing.
2) Concrete support not acceptable, only goodcase/solid wood can be considered to receiving / fixation FL-02 skirting.
3) all internal finishes LA-01 white laminate
4) Storage unit length measurement as per site conditions.

ENGINEER'S APPROVAL STATUS	☐ Code 1 ☒ Code 2 ☐ Code 3 ☐ Code 4 ☐ For Information Only	
Reviewed by Engineer's Technical Team (Name and Position)		Signature, Date
Engineer's Authorized Representative Name	Qussay Al Asaad 29.12.2021	Signature, Date and Stamp
Outgoing Ref. No., if applicable (to be filled by RE)		

CONTRACTOR RECEIVED SIGNATURE

Contractor's Authorized Representative Name		Signature and Stamp

DOCUMENT STATUS
Code 1 - Approved.
Code 2 - Approved as noted, work may proceed subject to incorporation of comments indicated.
Code 3 - Revise & resubmit.
Code 4 - Rejected
Corrections or comments made relative to submittals during this review do not relieve the contractor from compliance with the contract requirements and specfications.
Any amendments to this form should be approved by the Engineer and Dubai South prior to use by the contractor.

DUBAI SOUTH / AL BURJ Engineering Consultants / LOOTAH ENGINEERING AND CONSTRUCTION	DESIGN & BUILD OF THE NOLUS	SHOP DRAWING SUBMITTAL	
		Reference No.	BP159-LEC-SHD-CIV-000023
	RFP 159/BP/21 in Bussines Park of Dubai South	Rev. No	0
		Date Submitted	23-Dec-21
Originator of Submittal	LOOTAH ENGINEERING AND CONSTRUCTION LLC	No. of hardcopies	Soft copy

REFERENCE NUMBER	DRAWING TITLE	DESCRIPTION
BP159-LEC-SHD-CIV-000062	Long Wood Table Details-1	
BP159-LEC-SHD-CIV-000063	Long Wood Table Details-2	

Contractor's Authorized Representative Name	Omar Soliman Technical Manager	Signature and Stamp

Contractor's Statement: ***We certify that the shop drawings drawings submitted herewith is prepared in details and reflects the actual as-built condition of the works and is prepared in compliance with the shop drawings, redline drawings and specifiction except as otherwise specfically stated hereabove.***

Received by Engineer's Authorized Representative Name		Signature, Date and Stamp

ENGINEER'S COMMENTS

Hardcopies - Date Received by Engineer		Incoming Ref. No., if applicable (to be filled by RE)	

1) Height of Long Wood Table to be 900MM same top level of Aluminium Transom.
2) The floor square base plate to be rounded shape (SS MT-01 Finish).
3) The rectangle Base plate to be rounded shape (SS MT-01 Finish)
4) Length measurement to be taken as per site conditions.

ENGINEER'S APPROVAL STATUS	☐ Code 1 ☐ Code 2 ☐ Code 3 ☐ Code 4 ☐ For Information Only	
Reviewed by Engineer's Technical Team (Name and Position)		Signature, Date
Engineer's Authorized Representative Name	Qussay Al Asaad 27.12.2021	Signature, Date and Stamp
Outgoing Ref. No., if applicable (to be filled by RE)		

CONTRACTOR RECEIVED SIGNATURE

Contractor's Authorized Representative Name		Signature and Stamp

DOCUMENT STATUS
Code 1 - Approved.
Code 2 - Approved as noted, work may proceed subject to incorporation of comments indicated.
Code 3 - Revise & resubmit.
Code 4 - Rejected
Corrections or comments made relative to submittals during this review do not relieve the contractor from compliance with the contract requirements and specfications.
Any amendments to this form should be approved by the Engineer and Dubai South prior to use by the contractor.

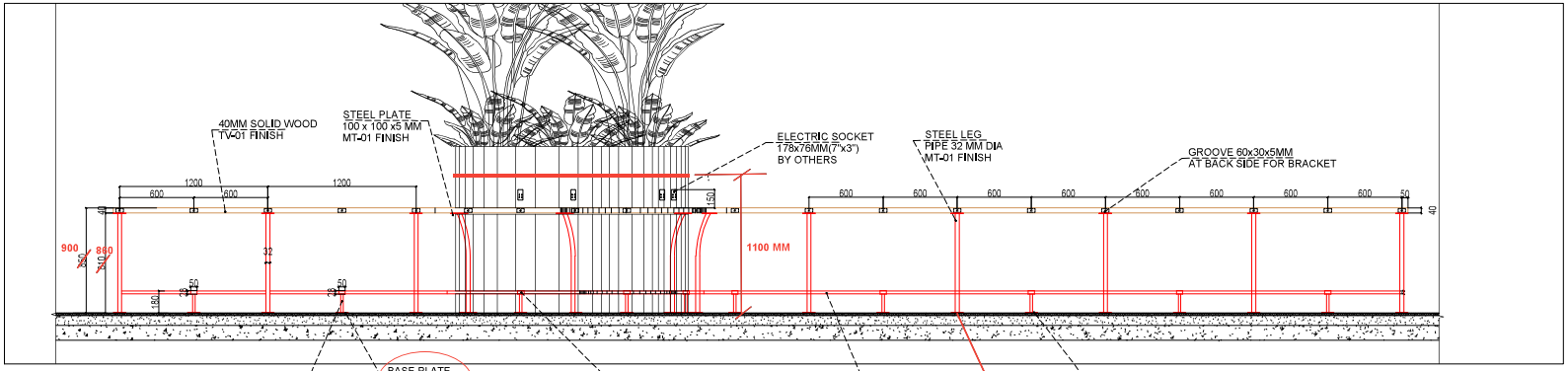

3 ELEVATION A
Scale 1 : 20

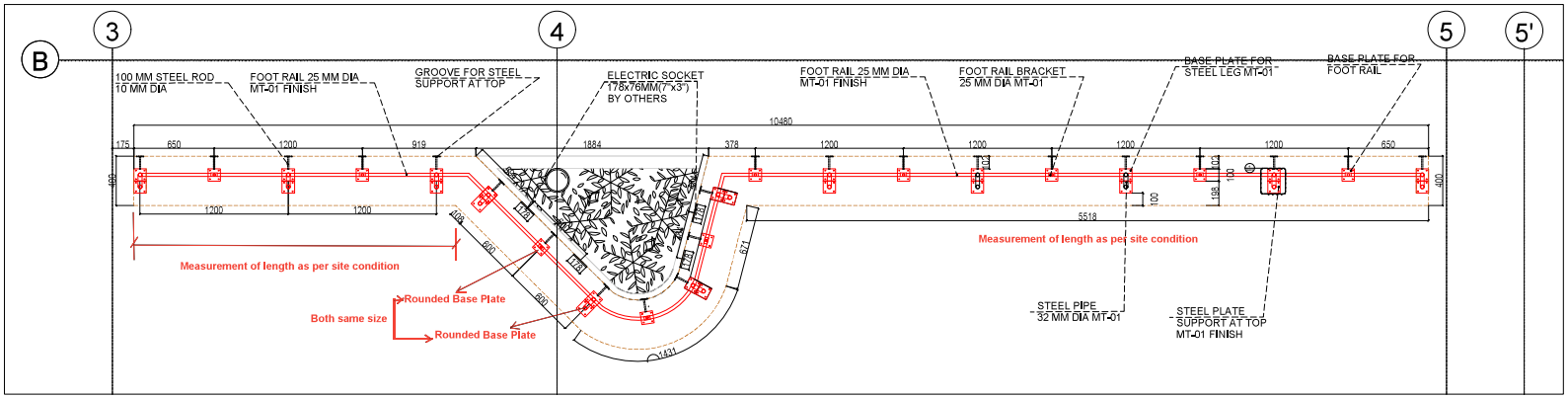

2 STEEL SUPPORT PLAN
Scale 1 : 20

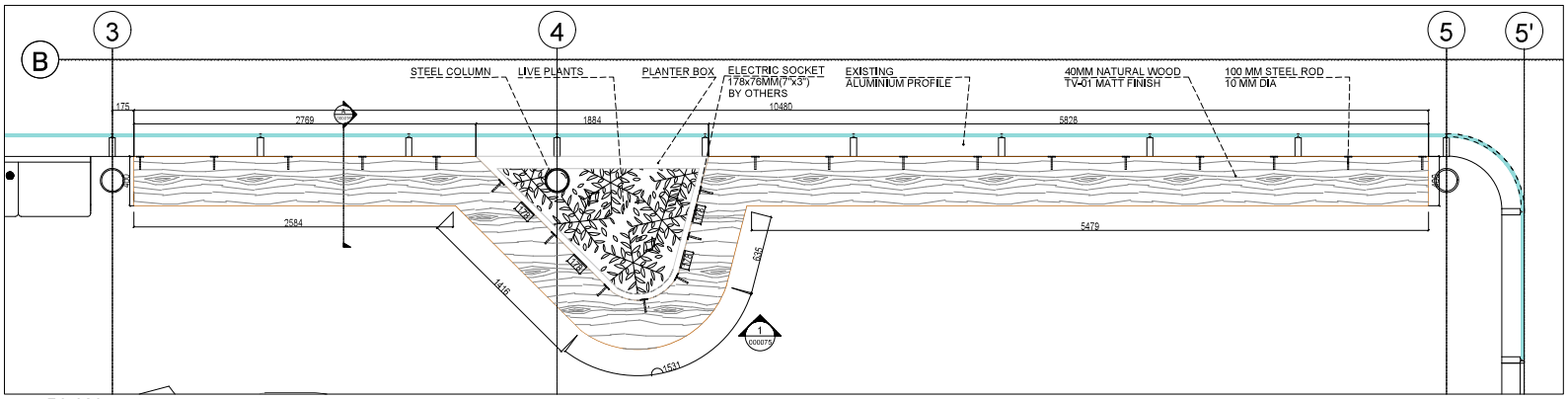

1 PLAN
Scale 1 : 20

KEY PLAN:

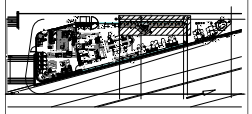

GENERAL NOTES:

1. DO NOT SCALE FROM THIS DRAWING.
2. ALL DIMENSIONS ARE IN MILLIMETERS. LEVELS ARE IN METERS UNLESS NOTED OTHERWISE.
3. THIS DRAWING SHOULD BE READ IN CONJUCTION WITH OTHER RELEVANT ARCHITECTURAL, STRUCTURAL, MECHANICAL & ELECTRICAL DRAWINGS AND SECTIONS OF THE SPECIFICATIONS.

REV	DATE	DETAIL
0	19/12/2021	FIRST ISSUE FOR APPROVAL

CONSULTANT:

yaghmour architects planners engineers

CLIENT:

DUBAI SOUTH

SUPERVISION CONSULTANT:

AL BURJ Engineering Consultants

MAIN CONTRACTOR:

LOOTAH ENGINEERING AND CONSTRUCTION

ID CONTRACTOR:

REVOREN
www.revorengroup.com
info@revorengroup.com

PROJECT NAME:

DESIGN & BUILD OF THE NOLUS IN BUSINESS PARK SOUTH DUBAI,UAE

TITLE:

LONG WOOD TABLE DETAILS-1

		DATE
DRAWN BY	MUSTHAFA	19-12-2021
CHECKED BY	SARA	
APPROVED BY	SARA	
SCALE	A1 / AS SHOWN	
DRAWING NUMBER		REV
BP159-LEC-SHD-CIV-000062		0

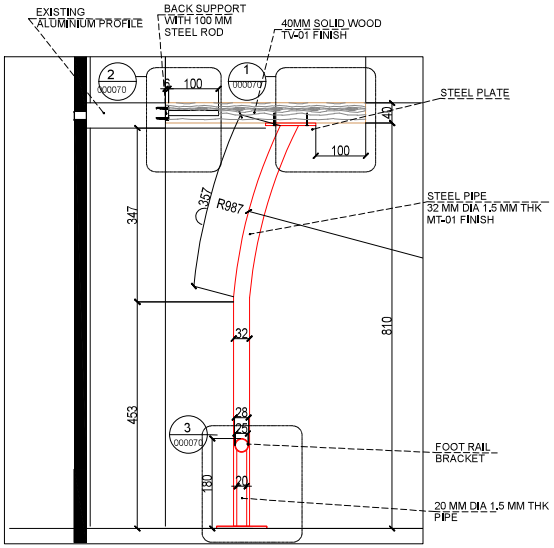

5 SECTION 1
Scale 1 : 5

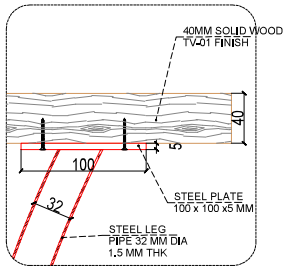

6 DETAIL 1
Scale 1 : 2

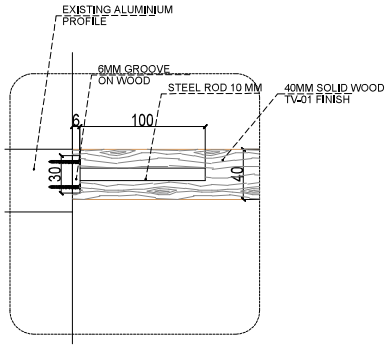

7 DETAIL 2
Scale 1 : 2

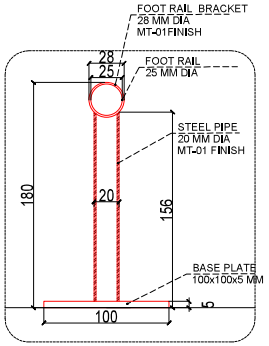

8 DETAIL 3
Scale 1 : 2

Rounded Base Plate Diameter 100 MM / SS MT-01 Finish

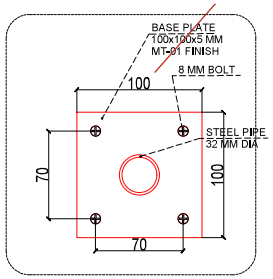

9 DETAIL 4
Scale 1 : 2

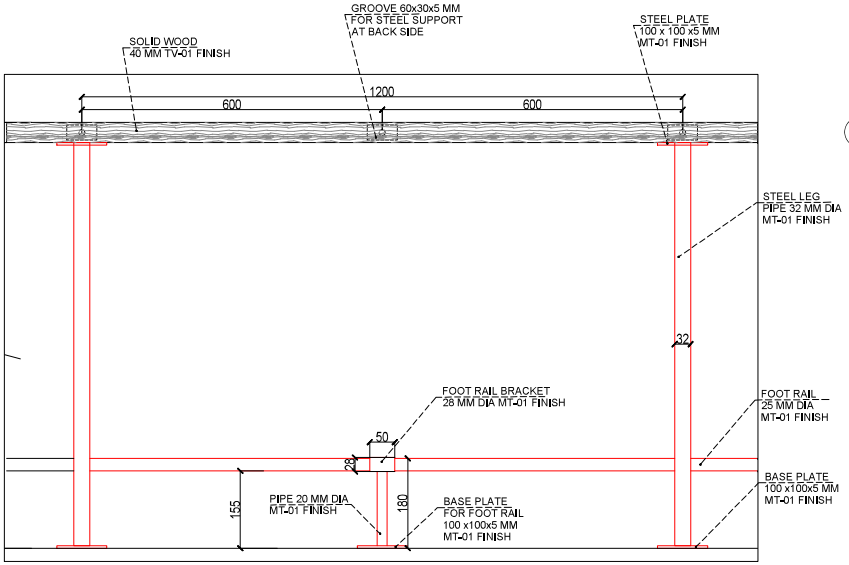

4 ELEVATION A
Scale 1 : 5

KEY PLAN:

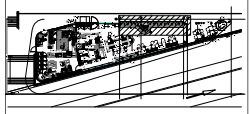

GENERAL NOTES:

1. DO NOT SCALE FROM THIS DRAWING.
2. ALL DIMENSIONS ARE IN MILLIMETERS. LEVELS ARE IN METERS UNLESS NOTED OTHERWISE.
3. THIS DRAWING SHOULD BE READ IN CONJUCTION WITH OTHER RELEVANT ARCHITECTURAL, STRUCTURAL, MECHANICAL & ELECTRICAL DRAWINGS AND SECTIONS OF THE SPECIFICATIONS.

REV	DATE	DETAIL
0	19/12/2021	FIRST ISSUE FOR APPROVAL

CONSULTANT:

yaghmour architects planners engineers

CLIENT:

DUBAI SOUTH

SUPERVISION CONSULTANT:

AL BURJ Engineering Consultants

MAIN CONTRACTOR:

LOOTAH ENGINEERING AND CONSTRUCTION

ID CONTRACTOR:

REVOREN
www.revorengroup.com
info@revorengroup.com

PROJECT NAME:

DESIGN & BUILD OF THE NOLUS IN BUSINESS PARK SOUTH DUBAI,UAE

TITLE:

LONG WOOD TABLE DETAILS-2

		DATE
DRAWN BY	MUSTHAFA	19-12-2021
CHECKED BY	SARA	
APPROVED BY	SARA	
SCALE	A1 / AS SHOWN	
DRAWING NUMBER		REV
BP159-LEC-SHD-CIV-000063		0

DUBAI SOUTH / AL BURJ Engineering Consultants / LOOTAH ENGINEERING AND CONSTRUCTION	DESIGN & BUILD OF THE NOLUS	SHOP DRAWING SUBMITTAL	
		Reference No.	BP159-LEC-SHD-CIV-000017
	RFP 159/BP/21 in Bussines Park of Dubai South	Rev. No	0
		Date Submitted	13-Dec-21
Originator of Submittal	LOOTAH ENGINEERING AND CONSTRUCTION LLC	No. of hardcopies	Soft copy

REFERENCE NUMBER	DRAWING TITLE	DESCRIPTION
BP159-LEC-SHD-CIV-000054	Vanity Counter Details	

Contractor's Authorized Representative Name	Omar Soliman Technical Manager	Signature and Stamp

Contractor's Statement: ***We certify that the shop drawings drawings submitted herewith is prepared in details and reflects the actual as-built condition of the works and is prepared in compliance with the shop drawings, redline drawings and specifiction except as otherwise specfically stated hereabove.***

Received by Engineer's Authorized Representative Name		Signature, Date and Stamp

ENGINEER'S COMMENTS

Hardcopies - Date Received by Engineer		Incoming Ref. No., if applicable (to be filled by RE)	

- See comments on the attached details drawing.
- White Laminate LA-01 to be considered for internal cabinet.
- Material submittal for St-02, LA-01 to be submited.
- All wood frames to solid wood, material submittal to be submited.
- Only GI steel support to be incorporated into work
- Any approval will not relieve Contractor from his liability and subject to no cost and time impact

ENGINEER'S APPROVAL STATUS	☐ Code 1 ☐ Code 2 ☐ Code 3 ☐ Code 4 ☐ For Information Only	
Reviewed by Engineer's Technical Team (Name and Position)		Signature, Date
Engineer's Authorized Representative Name	Qussay Al Asaad 15.12.2021	Signature, Date and Stamp
Outgoing Ref. No., if applicable (to be filled by RE)		

CONTRACTOR RECEIVED SIGNATURE

Contractor's Authorized Representative Name		Signature and Stamp

DOCUMENT STATUS
Code 1 - Approved.
Code 2 - Approved as noted, work may proceed subject to incorporation of comments indicated.
Code 3 - Revise & resubmit.
Code 4 - Rejected
Corrections or comments made relative to submittals during this review do not relieve the contractor from compliance with the contract requirements and specfications.
Any amendments to this form should be approved by the Engineer and Dubai South prior to use by the contractor.

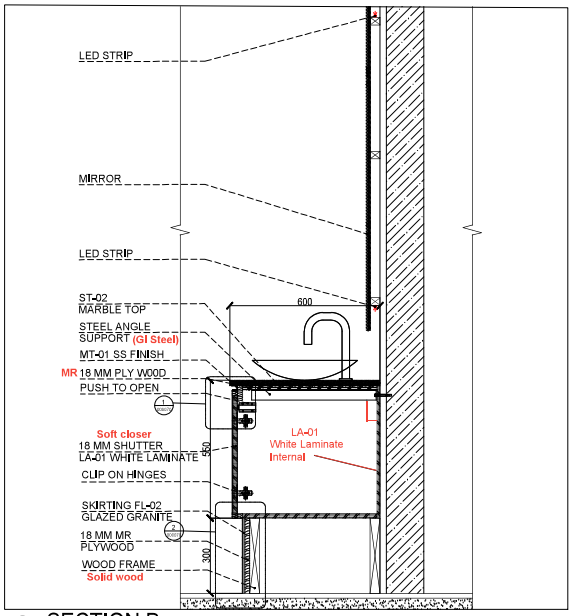

3 SECTION B
Scale 1 : 10

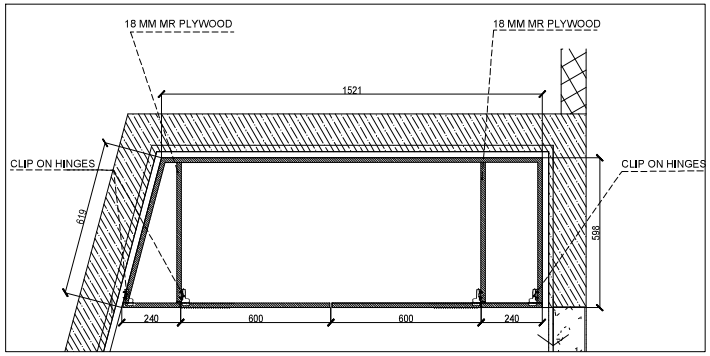

1 PLAN @ A-A
Scale 1 : 10

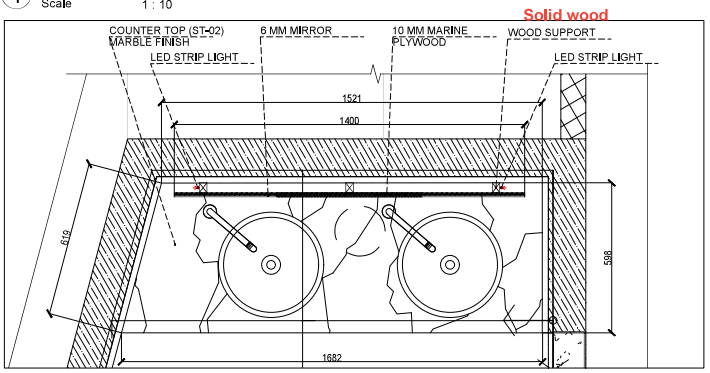

1 PLAN
Scale 1 : 10

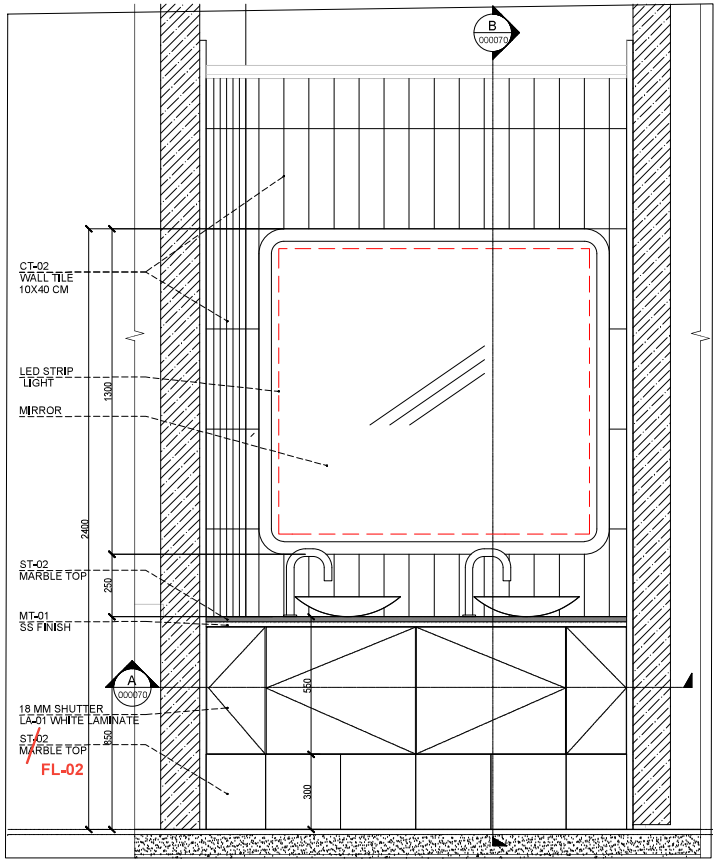

2 ELEVATION
Scale 1 : 10

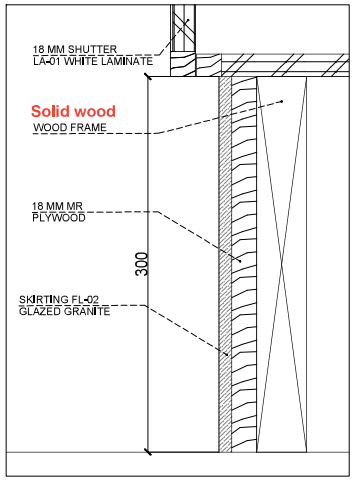

4 DETAIL A
Scale 1 : 2

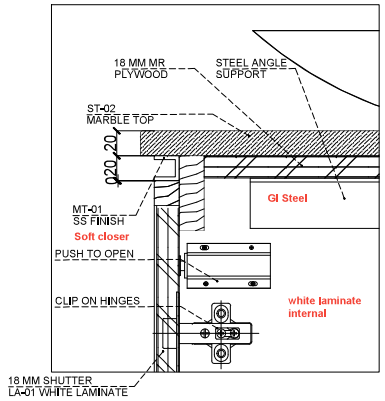

4 DETAIL B
Scale 1 : 2

KEY PLAN:

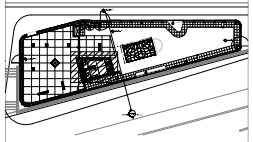

GENERAL NOTES:

1. DO NOT SCALE FROM THIS DRAWING.
2. ALL DIMENSIONS ARE IN MILLIMETERS. LEVELS ARE IN METERS UNLESS NOTED OTHERWISE.
3. THIS DRAWING SHOULD BE READ IN CONJUCTION WITH OTHER RELEVANT ARCHITECTURAL, STRUCTURAL, MECHANICAL & ELECTRICAL DRAWINGS AND SECTIONS OF THE SPECIFICATIONS.

REV	DATE	DETAIL
0	05/12/2021	FIRST ISSUE FOR APPROVAL

CONSULTANT:

yaghmour architects planners engineers

CLIENT:

DUBAI SOUTH

SUPERVISION CONSULTANT:

AL BURJ Engineering Consultants

MAIN CONTRACTOR:

LOOTAH ENGINEERING AND CONSTRUCTION

ID CONTRACTOR:

REVOREN
www.revorengroup.com
info@revorengroup.com

PROJECT NAME:

DESIGN & BUILD OF THE NOLUS IN BUSINESS PARK SOUTH DUBAI,UAE

TITLE:

VANITY COUNTER DETAILS

		DATE
DRAWN BY	MUSTHAFA	05-12-2021
CHECKED BY	SARA	
APPROVED BY	SARA	
SCALE	A1 / AS SHOWN	
DRAWING NUMBER	BP159-LEC-SHD-CIV-000054	REV 0

EMAAR | mirage | wsp | Shapoorji Pallonji | AIG

WORK INSPECTION REQUEST (ID)

VIDA DUBAI MALL ON PLOT 132-133 - DOWNTOWN DEVELOPMENT

Employer:	EMAAR DEVELOPMENT PJSC	Project Manager:	MIRAGE PROJECT MANAGEMENT SERVICES [MGI]
Supervision Consultant:	WSP MIDDLE EAST LTD [WSP]	Supervision Architect:	AEDAS/ WSP SUB CONSULTANT
Cost Manager:		Main Contractor:	SHAPOORJI PALLONJI MIDEAST. [SPML]

Discipline:	Civil	Struct	Arch	Finish	Land scape	ID	Submittal Ref:	SPML-VDM-ID-WIR-9170	REV. 00
Requested Date:	13/09/2022						Date of Inspection:	14/09/2022	
							Time of Inspection:	10AM	
Location:	Public						Building:	Public	
Level:	Ground Floor (Residential Lobby)						Activity:	WALL BOARDING	
Work Description:	Inspection Request for Public Area Level Ground Floor (RESIDENTIAL LOBBY) Wall Framing with insulation prior to board closing by Gyproc Wall System as per attached highlighted approved shop drawing								
Attached:	Checklist ☒		Sketches ☐			Others ☐ MEP Clearance			

Compliance Statement:
The Contractor hereby confirms that the Work offered for inspection are ready and complies with Contract documents/ details.

PROJECT MANAGER / PROJECT ENGINEER

Name & Signature: Date:

CONTRACTOR'S QA/QC ENGINEER:
(Comments

Name & Signature: Date: 13/09/22

REVIEWER'S COMMENTS

WSP (Str)	**Architects**
1. No objection, works checked and found acceptable for the highlighted area. 2. Contractor to ensure that work comply with approved SD and approved method statement.	
Name, Signature and date Comments Sheet Attached? Yes ☐ No ☐	Name, Signature and date Waqqas Al Hinai Comments Sheet Attached? Yes ☐ No ☐

SUPERVISION CONSULTANT A☐ B■ C☐ D☐ 14.09.2022

Name & Signature: Date:

Note: The Engineer's / Consultant's approval shall not in any way relieve the Contractor of his obligation under the Contract. The Contractor shall be solely responsible for the soundness and the correctness of the submitted Materials and Documents as per the required Contract Conditions and Contract Clauses. Consultants' comments on the Inspection requests shall not be construed as instruction to vary the scope of Contractor by whatsoever means

Codes: A: No Objection B: No Objection subject to comments C: Rejected, Revise & Resubmit D: For Information

Project Number	: P136
Project	: VIDA DUBAI MALL
Client:	: Emaar Properties PJSC
Engineer/Consultant	: M/S WSP Architectural Design
Main Contractors	: SHAPOORJI PALLONJI MIDEAST LLC
Sub-Contractor	: AIG

CHECKLIST FOR GYPSUM WALL PARTITION WORKS

WIR No.	Location:	Date:

SN	Items to be checked	Checked by Contractor			Checked by QC Team			Checked by Consultnat			Remarks
		Yes	No	N/A	Yes	No	N/A	Yes	No	N/A	
HSE Requirements											
1	All the HSE requirtments are fulfilled	✓			✓						
QA/QC Requirements											
1	Verify the approved shop drawing prior to proceed with the works	✓			✓						
2	Check that materials available on site are as per the approved material submittal.	✓			✓						
3	Set products accurately in location, alignment and elevation measured from established lines and levels.	✓			✓						
4	Check & Verify that the setting & marking out dimensions for the Walls are as per Drawing & reference points.	✓			✓						
5	Ensure all the Channels, Studs, Bracing, threaded rods are secured tight in accordance to the Drawing.										
6	Confirm Electrical fittings & other required MEP Services are installed as per spec & Drawing before boarding of the Walls, installation of services & Cladding featured panels works.										
7	Verify additional supports provided for all the light fixtures etc.										
8	Ensure the cables and wires properly clamped together.										
9	Check that all the openings required for the installation of MEP penetration are in correct position, dimension & acceptable.										
10	Check the jointing works; the Stucco application, mesh, sanding process for the gypsum ceiling works prior the painting works.										
11	Check the jointing works/adhesive PU before the next board Installed, joint filler,skim coat,mesh, sanding prior to primer and the painting works.										

For Final Approval

Contractor Site Engineer		Contractor QA/QC Inspector		Consultant Representative	
Name:	JOSEPH	Name:		Name:	
Signature:		Signature:		Signature:	
Date:	14/3/2021	Date:		Date:	

EMAAR mirage wsp Shapoorji Pallonji AIG

CLEARANCE FOR COMMENCEMENT OF CIVIL/ARCH ACTIVITY

AREA: Public	Room/Level: Ground Floor	Ref. AIG-VDM-ID-CL- 4376-00 DATE : 05/09/2022
Room Unit No.Type: Residential Lobby		

Clearance Request to proceed Public Area Ground Floor (RESIDENTIAL LOBBY) Wall Boarding as per highlighted attached shop drawing

Planned Start Date: 06 September 2022

Please check and confirm that you have completed all related works as above mentioned areas.

Drawings:			Received Date & Stamp (Shapoorji) Shapoorji Pallonji Mideast (L.L.C) VIDA DUBAI MALL 05 SEP 2022 RECEIVED
Originator: Name & Signature	Karthik		
Date:	3-Sep-22		
		Status	
			Received Date & Stamp (Shapoorji) Shapoorji Pallonji Mideast (L.L.C) (MEP Division) Vida Dubai Mall - U.A.E. 05 SEP 2022 RECEIVED

Shapoorji Pallonji Mideast (L.L.C) VIDA DUBAI MALL 05 SEP 2022 RECEIVED

Verification / Observation by Shapoorji Paloonji QA / QC Department

Sign.: ..... Time: .....

☐ New Activity can proceed ☐ New Activity - Not to proceed

If Remarks:

MR. BUS- 6094

SPML Electrical Name:	Signature:	Date:
SPML Plumbing & Drainage Name:	Signature:	Date: 05/09/22
SPML HVAC Name:	Signature:	Date:
SPML CIVIL Name:	Signature: 5/9/22	Date:
SPML FAÇADE NAME:	Signature:	Date:

WSP ELECTRICAL Name:	Signature:	Date: 08/9/22
WSP MECHANICAL Name:	Signature:	Date: 08/09/2022

CC: CM,QM,MEP,S.E,

DUBAI SOUTH	AL BURJ Engineering Consultants / LOOTAH ENGINEERING AND CONSTRUCTION	**DESIGN & BUILD OF THE NOLUS**	**WORK INSPECTION REQUEST (WIR)**	
			Reference No.	**BP159-LEC-RQI-CIV-000042**
Originator of WIR	**SAIFULLAH KHAN**	**RFP 159/BP/21 in Bussines Park of Dubai South**	Rev. No	**0**
			Date Submitted	**02/02/2022**

DESCRIPTION

Location/Area of Inspection	Nolus Project	Drawing Number	BP159-LEC-SHD-CIV-000040,000041,000042,000043
Specification Number	BP159-LEC-SHD-CIV-000040,000041,000042,000043	Inspection Request No.	BP159-LEC-WIR-CIV-000042
Material Submittal Number	BP159-LEC-MAT-CIV-000016	Inspection Test Plan No.	N/A
Method Statement Number	BP159-LEC-MES-CIV-000012	Inspection Time	11:00 AM ON 2/02/2022
Authorised Signature			

Type of Work

- ☐ Architectural ☐ Structural ■ Mechanical ☐ HVAC ☐ Finishes
- ☐ Infrastructure ☐ Landscape ☐ Electrical ☐ Survey ☐ Others (specify)

Enclosure ■ Drawings ☐ Specification ☐ Test Report ☐ Checklist ☐ Others (specify)

Work Element to be Inspected	**For Concrete Works**	
INSPECTION REQUEST FOR INSTALLATION OF 60 X 60 CM CEILING IN BOH KITCHEN AREA AS PER ATTACHED DRAWING	Volume	N/A
	Cement: SRC/OPC	N/A
	Start Time	N/A
	Finish Time	N/A
	Temperature	N/A

Attachments

Type of Work

- ☐ QA/QC Checklist of Contractor ☐ Survey Data ☐ Contractor's Snag List
- ☐ Part Plan in A4 (highlighted) ☐ MEP Clearance ☐ Others (specify)

The Contractor hereby certifies that the works are executed in accordance with the approved drawings, specifations and local authority regulations.

Contractor's QA/QC Engineer Name	**SAIFULLAH KHAN**	Signature	02/02/2022 Date	11:00:AM Time
Contractor's Project Manager/Authorized Representative	**Omar Soliman**	Signature	02/02/2022 Date	11:00:AM Time

Date and Time Received by The Engineer		**Incoming Ref. No.**		
Engineer's (Consultant) Name		Signature	Date	Time

ENGINEER'S COMMENTS

Coordination of Other Disciplines by the Engineer	Engineer's Technical Team Comments			
Electrical Inspection				
☐ Yes ☐ No ☐ Not applicable	Name	Signature	Date	Time
Mechanical Inspection				
☐ Yes ☐ No ☐ Not applicable	Name	Signature	Date	Time
Civil and Survey Inspection				
☐ Yes ☐ No ☐ Not applicable	Name	Signature	Date	Time
Civil and Survey Inspection				
☐ Yes ☐ No ☐ Not applicable	Name	Signature	Date	Time

Checking and approval by The Engineer shall not relieve the Contractor of its obligation to perform the work in accordance with the contract documents, health and safety requirements and local authority

Engineer's Authorized Representative Comments:

Approved with conditions:
1.) MEP clearance to be submitted.
2.) As agreed - Contractor should full coordinate with operator and kitchen suppliers during fixation the kitchen Hoods and connection tie.

Attachments	☐ Photos	☐ Others (specify)

APPROVAL STATUS	☐ Code 1	☐ Code 2	☐ Code 3	☐ Code 4	☐ For Information Only

Engineer's Authorized Representative Name	Qussay Al Asaad 03.02.2022	Signature, Date and Stamp
	Outgoing Ref. No.	

CONTRACTOR RECEIVED SIGNATURE

Date		Signature and Stamp	

DOCUMENT STATUS
Code 1 - Approved.
Code 2 - Approved as noted, work may proceed subject to incorporation of comments indicated.
Code 3 - Revise & resubmit.
Code 4 - Rejected
Corrections or comments made relative to inspection do not relieve the contractor from compliance with the contract requirments and specfications.
Any amendments to this form should be approved by the Engineer and Dubai South prior to use by the contractor.

DUBAI SOUTH	AL BURJ Engineering Consultants	LOOTAH ENGINEERING AND CONSTRUCTION	**DESIGN & BUILD OF THE NOLUS**	**WORK INSPECTION REQUEST (WIR)**
				Reference No. **BP159-LEC-RQI-CIV-000041**
Originator of WIR	**SAIFULLAH KHAN**		**RFP 159/BP/21 in Bussines Park of Dubai South**	Rev. No **0**
				Date Submitted **02/02/2022**

DESCRIPTION

Location/Area of Inspection	Nolus Project	Drawing Number	BP159-LEC-SHD-CIV-000040,000041,000042,000043
Specification Number	BP159-LEC-SHD-CIV-000040,000041,000042,000043	Inspection Request No.	BP159-LEC-WIR-CIV-000041
Material Submittal Number	BP159-LEC-MAT-CIV-000016	Inspection Test Plan No.	N/A
Method Statement Number	BP159-LEC-MES-CIV-000012	Inspection Time	11:00 AM ON 2/02/2022
Authorised Signature			

Type of Work

☐ Architectural ☐ Structural ■ Mechanical ☐ HVAC ☐ Finishes

☐ Infrastructure ☐ Landscape ☐ Electrical ☐ Survey ☐ Others (specify)

Enclosure ■ Drawings ☐ Specification ☐ Test Report ☐ Checklist ☐ Others (specify)

Work Element to be Inspected	**For Concrete Works**	
INSPECTION REQUEST FOR SURFACE PREPRATION APPLICATION OF PRIMER, APPLICATION OF 2 COAT STUCCO AND 1ST COAT OF BLACK PAINT ON CEILING IN SEATING AREA AS PER ATTACHED DRAWING	Volume	N/A
	Cement: SRC/OPC	N/A
	Start Time	N/A
	Finish Time	N/A
	Temperature	N/A

Attachments

Type of Work

☐ QA/QC Checklist of Contractor ☐ Survey Data ☐ Contractor's Snag List

☐ Part Plan in A4 (highlighted) ☐ MEP Clearance ☐ Others (specify)

The Contractor hereby certifies that the works are executed in accordance with the approved drawings, specifations and local authority regulations.

Contractor's QA/QC Engineer Name	**SAIFULLAH KHAN**	Signature	02/02/2022 Date	11:00:AM Time
Contractor's Project Manager/Authorized Representative	**Omar Soliman**	Signature	02/02/2022 Date	11:00:AM Time

Date and Time Received by The Engineer		**Incoming Ref. No.**		
Engineer's (Consultant) Name		Signature	Date	Time

ENGINEER'S COMMENTS

Coordination of Other Disciplines by the Engineer	Engineer's Technical Team Comments			
Electrical Inspection				
☐ Yes ☐ No ☐ Not applicable	Name	Signature	Date	Time
Mechanical Inspection				
☐ Yes ☐ No ☐ Not applicable	Name	Signature	Date	Time
Civil and Survey Inspection				
☐ Yes ☐ No ☐ Not applicable	Name	Signature	Date	Time
Civil and Survey Inspection				
☐ Yes ☐ No ☐ Not applicable	Name	Signature	Date	Time

Checking and approval by The Engineer shall not relieve the Contractor of its obligation to perform the work in accordance with the contract documents, health and safety requirements and local authority

Engineer's Authorized Representative Comments:

Approved with conditions:
1.) Final coat to be applied before installation MEP final devices & equipment.
2.) Protection the works is required and under Contractor responsibility.

Attachments	☐ Photos	☐ Others (specify)

APPROVAL STATUS	☐ Code 1	☐ Code 2	☐ Code 3	☐ Code 4	☐	**For Information Only**

Engineer's Authorized Representative Name	Qussay Al Asaad 03.02.2022	Signature, Date and Stamp
	Outgoing Ref. No.	

CONTRACTOR RECEIVED SIGNATURE

Date		**Signature and Stamp**	

DOCUMENT STATUS
Code 1 - Approved.
Code 2 - Approved as noted, work may proceed subject to incorporation of comments indicated.
Code 3 - Revise & resubmit.
Code 4 - Rejected
Corrections or comments made relative to inspection do not relieve the contractor from compliance with the contract requirments and specfications.
Any amendments to this form should be approved by the Engineer and Dubai South prior to use by the contractor.

DUBAI SOUTH	AL BURJ Engineering Consultants	LOOTAH ENGINEERING AND CONSTRUCTION	**DESIGN & BUILD OF THE NOLUS**	**WORK INSPECTION REQUEST (WIR)**
				Reference No. **BP159-LEC-RQI-CIV-000028**
Originator of WIR	**SAIFULLAH KHAN**		**RFP 159/BP/21 in Bussines Park of Dubai South**	Rev. No **0**
				Date Submitted **19/01/2022**

DESCRIPTION

Location/Area of Inspection	Nolus Project	Drawing Number	BP159-LEC-SHD-CIV-000040,000041,000042,000043
Specification Number	BP159-LEC-SHD-CIV-000040,000041,000042,000043	Inspection Request No.	BP159-LEC-WIR-CIV-000029
Material Submittal Number	BP159-LEC-MAT-CIV-000016	Inspection Test Plan No.	N/A
Method Statement Number	BP159-LEC-MES-CIV-000012	Inspection Time	11:00 AM ON 20/01/2022
Authorised Signature			

Type of Work

- ☐ Architectural ☐ Structural ■ Mechanical ☐ HVAC ☐ Finishes
- ☐ Infrastructure ☐ Landscape ☐ Electrical ☐ Survey ☐ Others (specify)

Enclosure ■ Drawings ☐ Specification ☐ Test Report ☐ Checklist ☐ Others (specify)

Work Element to be Inspected	**For Concrete Works**	
INSPECTION REQUEST FOR INSTALLATION OF CEILING GYPSUM BOARD CLOSER IN SEATING AREA AND BAR AREA B/W GRID LINE 2-5'/A-B AS PER ATTACHED DRAWING	Volume	N/A
	Cement: SRC/OPC	N/A
	Start Time	N/A
	Finish Time	N/A
	Temperature	N/A

Attachments

Type of Work

- ☐ QA/QC Checklist of Contractor ☐ Survey Data ☐ Contractor's Snag List
- ☐ Part Plan in A4 (highlighted) ☐ MEP Clearance ☐ Others (specify)

The Contractor hereby certifies that the works are executed in accordance with the approved drawings, specifations and local authority regulations.

Contractor's QA/QC Engineer Name	**SAIFULLAH KHAN**	Signature	19/01/2022 Date	04:00:PM Time
Contractor's Project Manager/Authorized Representative	**ARUN MAURYA**	Signature	19/01/2022 Date	04:00:PM Time

Date and Time Received by The Engineer		**Incoming Ref. No.**		
Engineer's (Consultant) Name		Signature	Date	Time

ENGINEER'S COMMENTS

Coordination of Other Disciplines by the Engineer	Engineer's Technical Team Comments			
Electrical Inspection				
☐ Yes ☐ No ☐ Not applicable	Name	Signature	Date	Time
Mechanical Inspection				
☐ Yes ☐ No ☐ Not applicable	Name	Signature	Date	Time
Civil and Survey Inspection				
☐ Yes ☐ No ☐ Not applicable	Name	Signature	Date	Time
Civil and Survey Inspection				
☐ Yes ☐ No ☐ Not applicable	Name	Signature	Date	Time

Checking and approval by The Engineer shall not relieve the Contractor of its obligation to perform the work in accordance with the contract documents, health and safety requirements and local authority

Engineer's Authorized Representative Comments:

~~1) Suspension for Bar areas not yet completed.~~
2) Bar area - Electrical tranks has to be raised above false ceiling level.
3) Bulkhead not yet completed.
4) Suspension system for decorative ceiling and light fittings to be completed prior close false ceiling.
5) MEP Clearance to be provi prior close false ceiling.

Attachments	☐ Photos	☐ Others (specify)

APPROVAL STATUS	☐ Code 1	☐ Code 2	☐ Code 3	☐ Code 4	☐ For Information Only

Engineer's Authorized Representative Name	Qussay Al Asaad 20.01.2022	Signature, Date and Stamp
	Outgoing Ref. No.	

CONTRACTOR RECEIVED SIGNATURE

Date		Signature and Stamp	

DOCUMENT STATUS
Code 1 - Approved.
Code 2 - Approved as noted, work may proceed subject to incorporation of comments indicated.
Code 3 - Revise & resubmit.
Code 4 - Rejected
Corrections or comments made relative to inspection do not relieve the contractor from compliance with the contract requirments and specfications.
Any amendments to this form should be approved by the Engineer and Dubai South prior to use by the contractor.

DUBAI SOUTH	AL BURJ Engineering Consultants / LOOTAH ENGINEERING AND CONSTRUCTION	**DESIGN & BUILD OF THE NOLUS**	**WORK INSPECTION REQUEST (WIR)**	
			Reference No.	**BP159-LEC-RQI-CIV-000034**
Originator of WIR	**SAIFULLAH KHAN**	**RFP 159/BP/21 in Bussines Park of Dubai South**	Rev. No	0
			Date Submitted	27/01/2022

DESCRIPTION

Location/Area of Inspection	Nolus Project	Drawing Number	BP159-LEC-SHD-CIV-00009
Specification Number	BP159-LEC-SHD-CIV-00009	Inspection Request No.	BP159-LEC-WIR-CIV-000035
Material Submittal Number	BP159-LEC-TAG-FNS-000004	Inspection Test Plan No.	N/A
Method Statement Number	BP159-LEC-MES-CIV-000010	Inspection Time	1:00 PM ON 28/01/2022
Authorised Signature			

Type of Work

- ☐ Architectural ☐ Structural ■ Mechanical ☐ HVAC ☐ Finishes
- ☐ Infrastructure ☐ Landscape ☐ Electrical ☐ Survey ☐ Others (specify)

Enclosure ■ Drawings ☐ Specification ☐ Test Report ☐ Checklist ☐ Others (specify)

Work Element to be Inspected	**For Concrete Works**	
INSPECTION REQUEST FOR INSTALLATION OF FLOOR TILE IN SEATING AREA AS PER ATTACHED DRAWING	Volume	N/A
	Cement: SRC/OPC	N/A
	Start Time	N/A
	Finish Time	N/A
	Temperature	N/A

Attachments

Type of Work

- ☐ QA/QC Checklist of Contractor ☐ Survey Data ☐ Contractor's Snag List
- ☐ Part Plan in A4 (highlighted) ☐ MEP Clearance ☐ Others (specify)

The Contractor hereby certifies that the works are executed in accordance with the approved drawings, specifations and local authority regulations.

Contractor's QA/QC Engineer Name	**SAIFULLAH KHAN**	Signature	27/01/2022 Date	04:00:PM Time
Contractor's Project Manager/Authorized Representative	**Omar Soliman**	Signature	27/01/2022 Date	04:00:PM Time

Date and Time Received by The Engineer		**Incoming Ref. No.**		
Engineer's (Consultant) Name		Signature	Date	Time

ENGINEER'S COMMENTS

Coordination of Other Disciplines by the Engineer	Engineer's Technical Team Comments			
Electrical Inspection				
☐ Yes ☐ No ☐ Not applicable	Name	Signature	Date	Time
Mechanical Inspection				
☐ Yes ☐ No ☐ Not applicable	Name	Signature	Date	Time
Civil and Survey Inspection				
☐ Yes ☐ No ☐ Not applicable	Name	Signature	Date	Time
Civil and Survey Inspection				
☐ Yes ☐ No ☐ Not applicable	Name	Signature	Date	Time

Checking and approval by The Engineer shall not relieve the Contractor of its obligation to perform the work in accordance with the contract documents, health and safety requirements and local authority

Engineer's Authorized Representative Comments:

Installation flooring tiles FL-02 is Approved with conditions:
1.) subject to comply with project specifications, drawings and authority regulations and requirements.
2.) The corner area at rounded glass and glass door is not accepted and need re-installed.

Attachments	☐ Photos	☐ Others (specify)

APPROVAL STATUS	☐ Code 1	☐ Code 2	☐ Code 3	☐ Code 4	☐ For Information Only
Engineer's Authorized Representative Name	Qussay Al Asaad 31.01.2022			Signature, Date and Stamp	
			Outgoing Ref. No.		

CONTRACTOR RECEIVED SIGNATURE

Date		Signature and Stamp	

DOCUMENT STATUS
Code 1 - Approved.
Code 2 - Approved as noted, work may proceed subject to incorporation of comments indicated.
Code 3 - Revise & resubmit.
Code 4 - Rejected
Corrections or comments made relative to inspection do not relieve the contractor from compliance with the contract requirments and specfications.
Any amendments to this form should be approved by the Engineer and Dubai South prior to use by the contractor.

DUBAI SOUTH	AL BURJ Engineering Consultants	LOOTAH ENGINEERING AND CONSTRUCTION	**DESIGN & BUILD OF THE NOLUS**	**WORK INSPECTION REQUEST (WIR)**
				Reference No. **BP159-LEC-RQI-CIV-000033**
Originator of WIR	**SAIFULLAH KHAN**		**RFP 159/BP/21 in Bussines Park of Dubai South**	Rev. No **0**
				Date Submitted **27/01/2022**

DESCRIPTION

Location/Area of Inspection	Nolus Project	Drawing Number	BP159-LEC-SHD-CIV-000011
Specification Number	BP159-LEC-SHD-CIV-000011	Inspection Request No.	BP159-LEC-WIR-CIV-000034
Material Submittal Number	BP159-LEC-TAG-FNS-000006	Inspection Test Plan No.	N/A
Method Statement Number	BP159-LEC-MES-CIV-000010	Inspection Time	11:00 AM ON 28/01/2022
Authorised Signature			

Type of Work

- ☐ Architectural ☐ Structural ■ Mechanical ☐ HVAC ☐ Finishes
- ☐ Infrastructure ☐ Landscape ☐ Electrical ☐ Survey ☐ Others (specify)

Enclosure ■ Drawings ☐ Specification ☐ Test Report ☐ Checklist ☐ Others (specify)

Work Element to be Inspected	**For Concrete Works**	
INSPECTION REQUEST FOR INSTALLATION OF TOILET AND COUNTER WALL TILE AS PER ATTACHED DRAWING	Volume	N/A
	Cement: SRC/OPC	N/A
	Start Time	N/A
	Finish Time	N/A
	Temperature	N/A

Attachments

Type of Work

- ☐ QA/QC Checklist of Contractor ☐ Survey Data ☐ Contractor's Snag List
- ☐ Part Plan in A4 (highlighted) ☐ MEP Clearance ☐ Others (specify)

The Contractor hereby certifies that the works are executed in accordance with the approved drawings, specifations and local authority regulations.

Contractor's QA/QC Engineer Name	**SAIFULLAH KHAN**	Signature	27/01/2022 Date	04:00:PM Time
Contractor's Project Manager/Authorized Representative	**Omar Soliman**	Signature	27/01/2022 Date	04:00:PM Time

Date and Time Received by The Engineer		**Incoming Ref. No.**		
Engineer's (Consultant) Name		Signature	Date	Time

ENGINEER'S COMMENTS

Coordination of Other Disciplines by the Engineer	Engineer's Technical Team Comments			
Electrical Inspection				
☐ Yes ☐ No ☐ Not applicable	Name	Signature	Date	Time
Mechanical Inspection				
☐ Yes ☐ No ☐ Not applicable	Name	Signature	Date	Time
Civil and Survey Inspection				
☐ Yes ☐ No ☐ Not applicable	Name	Signature	Date	Time
Civil and Survey Inspection				
☐ Yes ☐ No ☐ Not applicable	Name	Signature	Date	Time

Checking and approval by The Engineer shall not relieve the Contractor of its obligation to perform the work in accordance with the contract documents, health and safety requirements and local authority

Engineer's Authorized Representative Comments:

No objection subject to comply with project specifications, drawings and authority regulations and requirements.
- To complete remaining works at toilet area (Vanity counter and doors partition)
- CT-01 behind Counter not yet delivered /installed.

Attachments	☐ Photos	☐ Others (specify)

APPROVAL STATUS	☐ Code 1	☐ Code 2	☐ Code 3	☐ Code 4	☐ For Information Only
Engineer's Authorized Representative Name					Signature, Date and Stamp
			Outgoing Ref. No.		

CONTRACTOR RECEIVED SIGNATURE

Date		Signature and Stamp	

DOCUMENT STATUS
Code 1 - Approved.
Code 2 - Approved as noted, work may proceed subject to incorporation of comments indicated.
Code 3 - Revise & resubmit.
Code 4 - Rejected
Corrections or comments made relative to inspection do not relieve the contractor from compliance with the contract requirments and specfications.
Any amendments to this form should be approved by the Engineer and Dubai South prior to use by the contractor.

DUBAI SOUTH / AL BURJ Engineering Consultants / LOOTAH Engineering and Construction	DESIGN & BUILD OF THE NOLUS	SHOP DRAWING SUBMITTAL	
		Reference No.	BP159-LEC-SHD-CIV-000011
	RFP 159/BP/21 in Bussines Park of Dubai South	Rev. No	1
		Date Submitted	20-Dec-21
Originator of Submittal	LOOTAH ENGINEERING AND CONSTRUCTION LLC	No. of hardcopies	Soft copy

REFERENCE NUMBER	DRAWING TITLE	DESCRIPTION
BP159-LEC-SHD-CIV-000018	Toilet (Male & Female) Tiling Layout @ Ground Floor	
BP159-LEC-SHD-CIV-000019	Toilet (Male & Female) Tiling Sectional Elevation # 01, 02, 03 & 04	
BP159-LEC-SHD-CIV-000020	Toilet (Male & Female) Tiling Sectional Elevation # 05 & 06	
BP159-LEC-SHD-CIV-000021	Toilet (Male & Female) Tiling Sectional Elevation # 07 & 08	

Contractor's Authorized Representative Name	Omar Soliman Technical Manager	Signature and Stamp

Contractor's Statement: ***We certify that the shop drawings drawings submitted herewith is prepared in details and reflects the actual as-built condition of the works and is prepared in compliance with the shop drawings, redline drawings and specifiction except as otherwise specfically stated hereabove.***

Received by Engineer's Authorized Representative Name		Signature, Date and Stamp

ENGINEER'S COMMENTS

Hardcopies - Date Received by Engineer		Incoming Ref. No., if applicable (to be filled by RE)	

Approved with conditions:

1) Subject to submit sample for CT-02 and approved by Client / Engineer.
2) See comments on the attached shop drawing.
3) subject to complete submission and approval of remaining items for tiles, sanitary ware, Ironmongery, LA-02.
4) This approval will not relieve Contractor from his liability.
5) Subject to no cost and time impact.

ENGINEER'S APPROVAL STATUS	☐ Code 1 ☒ Code 2 ☐ Code 3 ☐ Code 4 ☐ For Information Only	
Reviewed by Engineer's Technical Team (Name and Position)		Signature, Date
Engineer's Authorized Representative Name	Qussay Al Asaad 22.12.2021	Signature, Date and Stamp
Outgoing Ref. No., if applicable (to be filled by RE)		

CONTRACTOR RECEIVED SIGNATURE

Contractor's Authorized Representative Name		Signature and Stamp

DOCUMENT STATUS
Code 1 - Approved.
Code 2 - Approved as noted, work may proceed subject to incorporation of comments indicated.
Code 3 - Revise & resubmit.
Code 4 - Rejected
Corrections or comments made relative to submittals during this review do not relieve the contractor from compliance with the contract requirements and specfications.
Any amendments to this form should be approved by the Engineer and Dubai South prior to use by the contractor.

DUBAI SOUTH	AL BURJ Engineering Consultants / LOOTAH ENGINEERING AND CONSTRUCTION	**DESIGN & BUILD OF THE NOLUS**	**WORK INSPECTION REQUEST (WIR)**	
			Reference No.	**BP159-LEC-RQI-CIV-000032**
Originator of WIR	**SAIFULLAH KHAN**	**RFP 159/BP/21 in Bussines Park of Dubai South**	Rev. No	0
			Date Submitted	27/01/2022

DESCRIPTION

Location/Area of Inspection	Nolus Project	Drawing Number	BP159-LEC-SHD-CIV-000016
Specification Number	BP159-LEC-SHD-CIV-000016	Inspection Request No.	BP159-LEC-WIR-CIV-000033
Material Submittal Number	BP159-LEC-TAG-FNS-000003	Inspection Test Plan No.	N/A
Method Statement Number	BP159-LEC-MES-CIV-000010	Inspection Time	11:00 AM ON 28/01/2022
Authorised Signature			

Type of Work

- [ ] Architectural
- [ ] Structural
- [x] Mechanical
- [ ] HVAC
- [ ] Finishes
- [ ] Infrastructure
- [ ] Landscape
- [ ] Electrical
- [ ] Survey
- [ ] Others (specify)

Enclosure

- [x] Drawings
- [ ] Specification
- [ ] Test Report
- [ ] Checklist
- [ ] Others (specify)

Work Element to be Inspected	**For Concrete Works**	
INSPECTION REQUEST FOR INSTALLATION OF BOH KITCHEN AREA WALL TILE AS PER ATTACHED DRAWING	Volume	N/A
	Cement: SRC/OPC	N/A
	Start Time	N/A
	Finish Time	N/A
	Temperature	N/A

Attachments

Type of Work

- [ ] QA/QC Checklist of Contractor
- [ ] Survey Data
- [ ] Contractor's Snag List
- [ ] Part Plan in A4 (highlighted)
- [ ] MEP Clearance
- [ ] Others (specify)

The Contractor hereby certifies that the works are executed in accordance with the approved drawings, specifations and local authority regulations.

Contractor's QA/QC Engineer Name	**SAIFULLAH KHAN**	Signature	27/01/2022 Date	04:00:PM Time
Contractor's Project Manager/Authorized Representative	**Omar Soliman**	Signature	27/01/2022 Date	04:00:PM Time

Date and Time Received by The Engineer		**Incoming Ref. No.**		
Engineer's (Consultant) Name		Signature	Date	Time

ENGINEER'S COMMENTS

Coordination of Other Disciplines by the Engineer	Engineer's Technical Team Comments			
Electrical Inspection				
☐ Yes ☐ No ☐ Not applicable	Name	Signature	Date	Time
Mechanical Inspection				
☐ Yes ☐ No ☐ Not applicable	Name	Signature	Date	Time
Civil and Survey Inspection				
☐ Yes ☐ No ☐ Not applicable	Name	Signature	Date	Time
Civil and Survey Inspection				
☐ Yes ☐ No ☐ Not applicable	Name	Signature	Date	Time

Checking and approval by The Engineer shall not relieve the Contractor of its obligation to perform the work in accordance with the contract documents, health and safety requirements and local authority

Engineer's Authorized Representative Comments:

No objection subject to comply with project specifications, drawings and authority regulations and requirements.

Attachments	☐ Photos	☐ Others (specify)

APPROVAL STATUS	☐ Code 1	☐ Code 2	☐ Code 3	☐ Code 4	☐ For Information Only

Engineer's Authorized Representative Name	Qussay Al Asaad 31.01.2022	Signature, Date and Stamp
	Outgoing Ref. No.	

CONTRACTOR RECEIVED SIGNATURE

Date		Signature and Stamp	

DOCUMENT STATUS
Code 1 - Approved.
Code 2 - Approved as noted, work may proceed subject to incorporation of comments indicated.
Code 3 - Revise & resubmit.
Code 4 - Rejected
Corrections or comments made relative to inspection do not relieve the contractor from compliance with the contract requirments and specfications.
Any amendments to this form should be approved by the Engineer and Dubai South prior to use by the contractor.

DUBAI SOUTH	AL BURJ Engineering Consultants / LOOTAH ENGINEERING AND CONSTRUCTION	**DESIGN & BUILD OF THE NOLUS**	**WORK INSPECTION REQUEST (WIR)**	
			Reference No.	**BP159-LEC-RQI-CIV-000042**
Originator of WIR	**SAIFULLAH KHAN**	**RFP 159/BP/21 in Bussines Park of Dubai South**	Rev. No	**0**
			Date Submitted	**02/02/2022**

DESCRIPTION

Location/Area of Inspection	Nolus Project	Drawing Number	BP159-LEC-SHD-CIV-000040,000041,000042,000043
Specification Number	BP159-LEC-SHD-CIV-000040,000041,000042,000043	Inspection Request No.	BP159-LEC-WIR-CIV-000042
Material Submittal Number	BP159-LEC-MAT-CIV-000016	Inspection Test Plan No.	N/A
Method Statement Number	BP159-LEC-MES-CIV-000012	Inspection Time	11:00 AM ON 2/02/2022
Authorised Signature			

Type of Work

- ☐ Architectural ☐ Structural ■ Mechanical ☐ HVAC ☐ Finishes
- ☐ Infrastructure ☐ Landscape ☐ Electrical ☐ Survey ☐ Others (specify)

Enclosure ■ Drawings ☐ Specification ☐ Test Report ☐ Checklist ☐ Others (specify)

Work Element to be Inspected	**For Concrete Works**	
INSPECTION REQUEST FOR INSTALLATION OF 60 X 60 CM CEILING IN BOH KITCHEN AREA AS PER ATTACHED DRAWING	Volume	N/A
	Cement: SRC/OPC	N/A
	Start Time	N/A
	Finish Time	N/A
	Temperature	N/A

Attachments

Type of Work

- ☐ QA/QC Checklist of Contractor ☐ Survey Data ☐ Contractor's Snag List
- ☐ Part Plan in A4 (highlighted) ☐ MEP Clearance ☐ Others (specify)

The Contractor hereby certifies that the works are executed in accordance with the approved drawings, specifations and local authority regulations.

Contractor's QA/QC Engineer Name	**SAIFULLAH KHAN**	Signature	02/02/2022 Date	11:00:AM Time
Contractor's Project Manager/Authorized Representative	**Omar Soliman**	Signature	02/02/2022 Date	11:00:AM Time

Date and Time Received by The Engineer		**Incoming Ref. No.**		
Engineer's (Consultant) Name		Signature	Date	Time

ENGINEER'S COMMENTS

Coordination of Other Disciplines by the Engineer	Engineer's Technical Team Comments			
Electrical Inspection				
☐ Yes ☐ No ☐ Not applicable	Name	Signature	Date	Time
Mechanical Inspection				
☐ Yes ☐ No ☐ Not applicable	Name	Signature	Date	Time
Civil and Survey Inspection				
☐ Yes ☐ No ☐ Not applicable	Name	Signature	Date	Time
Civil and Survey Inspection				
☐ Yes ☐ No ☐ Not applicable	Name	Signature	Date	Time

Checking and approval by The Engineer shall not relieve the Contractor of its obligation to perform the work in accordance with the contract documents, health and safety requirements and local authority

Engineer's Authorized Representative Comments:

Approved with conditions:
1.) MEP clearance to be submitted.
2.) As agreed - Contractor should full coordinate with operator and kitchen suppliers during fixation the kitchen Hoods and connection tie.

Attachments	☐ Photos	☐ Others (specify)

APPROVAL STATUS	☐ Code 1	☐ Code 2	☐ Code 3	☐ Code 4	☐ For Information Only

Engineer's Authorized Representative Name	Qussay Al Asaad 03.02.2022	Signature, Date and Stamp
	Outgoing Ref. No.	

CONTRACTOR RECEIVED SIGNATURE

Date		Signature and Stamp	

DOCUMENT STATUS
Code 1 - Approved.
Code 2 - Approved as noted, work may proceed subject to incorporation of comments indicated.
Code 3 - Revise & resubmit.
Code 4 - Rejected
Corrections or comments made relative to inspection do not relieve the contractor from compliance with the contract requirments and specfications.
Any amendments to this form should be approved by the Engineer and Dubai South prior to use by the contractor.

DUBAI SOUTH	AL BURJ Engineering Consultants	LOOTAH ENGINEERING AND CONSTRUCTION	**DESIGN & BUILD OF THE NOLUS**	**WORK INSPECTION REQUEST (WIR)**
				Reference No. **BP159-LEC-RQI-CIV-000041**
Originator of WIR	**SAIFULLAH KHAN**		**RFP 159/BP/21 in Bussines Park of Dubai South**	Rev. No **0**
				Date Submitted **02/02/2022**

DESCRIPTION

Location/Area of Inspection	Nolus Project	Drawing Number	BP159-LEC-SHD-CIV-000040,000041,000042,000043
Specification Number	BP159-LEC-SHD-CIV-000040,000041,000042,000043	Inspection Request No.	BP159-LEC-WIR-CIV-000041
Material Submittal Number	BP159-LEC-MAT-CIV-000016	Inspection Test Plan No.	N/A
Method Statement Number	BP159-LEC-MES-CIV-000012	Inspection Time	11:00 AM ON 2/02/2022
Authorised Signature			

Type of Work

☐ Architectural ☐ Structural ■ Mechanical ☐ HVAC ☐ Finishes

☐ Infrastructure ☐ Landscape ☐ Electrical ☐ Survey ☐ Others (specify)

Enclosure ■ Drawings ☐ Specification ☐ Test Report ☐ Checklist ☐ Others (specify)

Work Element to be Inspected	**For Concrete Works**	
INSPECTION REQUEST FOR SURFACE PREPRATION APPLICATION OF PRIMER, APPLICATION OF 2 COAT STUCCO AND 1ST COAT OF BLACK PAINT ON CEILING IN SEATING AREA AS PER ATTACHED DRAWING	Volume	N/A
	Cement: SRC/OPC	N/A
	Start Time	N/A
	Finish Time	N/A
	Temperature	N/A

Attachments

Type of Work

☐ QA/QC Checklist of Contractor ☐ Survey Data ☐ Contractor's Snag List

☐ Part Plan in A4 (highlighted) ☐ MEP Clearance ☐ Others (specify)

The Contractor hereby certifies that the works are executed in accordance with the approved drawings, specifations and local authority regulations.

Contractor's QA/QC Engineer Name	**SAIFULLAH KHAN**	Signature	02/02/2022 Date	11:00:AM Time
Contractor's Project Manager/Authorized Representative	**Omar Soliman**	Signature	02/02/2022 Date	11:00:AM Time

Date and Time Received by The Engineer		**Incoming Ref. No.**		
Engineer's (Consultant) Name		Signature	Date	Time

ENGINEER'S COMMENTS

Coordination of Other Disciplines by the Engineer	Engineer's Technical Team Comments			
Electrical Inspection				
☐ Yes ☐ No ☐ Not applicable	Name	Signature	Date	Time
Mechanical Inspection				
☐ Yes ☐ No ☐ Not applicable	Name	Signature	Date	Time
Civil and Survey Inspection				
☐ Yes ☐ No ☐ Not applicable	Name	Signature	Date	Time
Civil and Survey Inspection				
☐ Yes ☐ No ☐ Not applicable	Name	Signature	Date	Time

Checking and approval by The Engineer shall not relieve the Contractor of its obligation to perform the work in accordance with the contract documents, health and safety requirements and local authority

Engineer's Authorized Representative Comments:

Approved with conditions:
1.) Final coat to be applied before installation MEP final devices & equipment.
2.) Protection the works is required and under Contractor responsibility.

Attachments	☐ Photos	☐ Others (specify)

APPROVAL STATUS	☐ Code 1	☐ Code 2	☐ Code 3	☐ Code 4	☐	**For Information Only**

Engineer's Authorized Representative Name	Qussay Al Asaad 03.02.2022	Signature, Date and Stamp
	Outgoing Ref. No.	

CONTRACTOR RECEIVED SIGNATURE

Date		**Signature and Stamp**	

DOCUMENT STATUS
Code 1 - Approved.
Code 2 - Approved as noted, work may proceed subject to incorporation of comments indicated.
Code 3 - Revise & resubmit.
Code 4 - Rejected
Corrections or comments made relative to inspection do not relieve the contractor from compliance with the contract requirments and specfications.
Any amendments to this form should be approved by the Engineer and Dubai South prior to use by the contractor.

DUBAI SOUTH	AL BURJ Engineering Consultants	LOOTAH ENGINEERING AND CONSTRUCTION	**DESIGN & BUILD OF THE NOLUS**	**WORK INSPECTION REQUEST (WIR)**
				Reference No. **BP159-LEC-RQI-CIV-000028**
Originator of WIR	**SAIFULLAH KHAN**		**RFP 159/BP/21 in Bussines Park of Dubai South**	Rev. No **0**
				Date Submitted **19/01/2022**

DESCRIPTION

Location/Area of Inspection	Nolus Project	Drawing Number	BP159-LEC-SHD-CIV-000040,000041,000042,000043
Specification Number	BP159-LEC-SHD-CIV-000040,000041,000042,000043	Inspection Request No.	BP159-LEC-WIR-CIV-000029
Material Submittal Number	BP159-LEC-MAT-CIV-000016	Inspection Test Plan No.	N/A
Method Statement Number	BP159-LEC-MES-CIV-000012	Inspection Time	11:00 AM ON 20/01/2022
Authorised Signature			

Type of Work

- ☐ Architectural ☐ Structural ■ Mechanical ☐ HVAC ☐ Finishes
- ☐ Infrastructure ☐ Landscape ☐ Electrical ☐ Survey ☐ Others (specify)

Enclosure ■ Drawings ☐ Specification ☐ Test Report ☐ Checklist ☐ Others (specify)

Work Element to be Inspected	**For Concrete Works**	
INSPECTION REQUEST FOR INSTALLATION OF CEILING GYPSUM BOARD CLOSER IN SEATING AREA AND BAR AREA B/W GRID LINE 2-5'/A-B AS PER ATTACHED DRAWING	Volume	N/A
	Cement: SRC/OPC	N/A
	Start Time	N/A
	Finish Time	N/A
	Temperature	N/A

Attachments

Type of Work

- ☐ QA/QC Checklist of Contractor ☐ Survey Data ☐ Contractor's Snag List
- ☐ Part Plan in A4 (highlighted) ☐ MEP Clearance ☐ Others (specify)

The Contractor hereby certifies that the works are executed in accordance with the approved drawings, specifations and local authority regulations.

Contractor's QA/QC Engineer Name	**SAIFULLAH KHAN**	Signature	19/01/2022 Date	04:00:PM Time
Contractor's Project Manager/Authorized Representative	**ARUN MAURYA**	Signature	19/01/2022 Date	04:00:PM Time

Date and Time Received by The Engineer		**Incoming Ref. No.**		
Engineer's (Consultant) Name		Signature	Date	Time

ENGINEER'S COMMENTS

Coordination of Other Disciplines by the Engineer	Engineer's Technical Team Comments			
Electrical Inspection				
☐ Yes ☐ No ☐ Not applicable	Name	Signature	Date	Time
Mechanical Inspection				
☐ Yes ☐ No ☐ Not applicable	Name	Signature	Date	Time
Civil and Survey Inspection				
☐ Yes ☐ No ☐ Not applicable	Name	Signature	Date	Time
Civil and Survey Inspection				
☐ Yes ☐ No ☐ Not applicable	Name	Signature	Date	Time

Checking and approval by The Engineer shall not relieve the Contractor of its obligation to perform the work in accordance with the contract documents, health and safety requirements and local authority

Engineer's Authorized Representative Comments:

~~1) Suspension for Bar areas not yet completed.~~
2) Bar area - Electrical tranks has to be raised above false ceiling level.
3) Bulkhead not yet completed.
4) Suspension system for decorative ceiling and light fittings to be completed prior close false ceiling.
5) MEP Clearance to be provi prior close false ceiling.

Attachments	☐ Photos	☐ Others (specify)

APPROVAL STATUS	☐ Code 1	☐ Code 2	☐ Code 3	☐ Code 4	☐ For Information Only

Engineer's Authorized Representative Name	Qussay Al Asaad 20.01.2022	Signature, Date and Stamp
	Outgoing Ref. No.	

CONTRACTOR RECEIVED SIGNATURE

Date		Signature and Stamp	

DOCUMENT STATUS
Code 1 - Approved.
Code 2 - Approved as noted, work may proceed subject to incorporation of comments indicated.
Code 3 - Revise & resubmit.
Code 4 - Rejected
Corrections or comments made relative to inspection do not relieve the contractor from compliance with the contract requirments and specfications.
Any amendments to this form should be approved by the Engineer and Dubai South prior to use by the contractor.

DUBAI SOUTH	AL BURJ Engineering Consultants / LOOTAH ENGINEERING AND CONSTRUCTION	**DESIGN & BUILD OF THE NOLUS**	**WORK INSPECTION REQUEST (WIR)**	
			Reference No.	**BP159-LEC-RQI-CIV-000034**
Originator of WIR	**SAIFULLAH KHAN**	**RFP 159/BP/21 in Bussines Park of Dubai South**	Rev. No	0
			Date Submitted	27/01/2022

DESCRIPTION

Location/Area of Inspection	Nolus Project	Drawing Number	BP159-LEC-SHD-CIV-00009
Specification Number	BP159-LEC-SHD-CIV-00009	Inspection Request No.	BP159-LEC-WIR-CIV-000035
Material Submittal Number	BP159-LEC-TAG-FNS-000004	Inspection Test Plan No.	N/A
Method Statement Number	BP159-LEC-MES-CIV-000010	Inspection Time	1:00 PM ON 28/01/2022
Authorised Signature			

Type of Work

- ☐ Architectural ☐ Structural ■ Mechanical ☐ HVAC ☐ Finishes
- ☐ Infrastructure ☐ Landscape ☐ Electrical ☐ Survey ☐ Others (specify)

Enclosure ■ Drawings ☐ Specification ☐ Test Report ☐ Checklist ☐ Others (specify)

Work Element to be Inspected	**For Concrete Works**	
INSPECTION REQUEST FOR INSTALLATION OF FLOOR TILE IN SEATING AREA AS PER ATTACHED DRAWING	Volume	N/A
	Cement: SRC/OPC	N/A
	Start Time	N/A
	Finish Time	N/A
	Temperature	N/A

Attachments

Type of Work

- ☐ QA/QC Checklist of Contractor ☐ Survey Data ☐ Contractor's Snag List
- ☐ Part Plan in A4 (highlighted) ☐ MEP Clearance ☐ Others (specify)

The Contractor hereby certifies that the works are executed in accordance with the approved drawings, specifations and local authority regulations.

Contractor's QA/QC Engineer Name	**SAIFULLAH KHAN**	Signature	27/01/2022 Date	04:00:PM Time
Contractor's Project Manager/Authorized Representative	**Omar Soliman**	Signature	27/01/2022 Date	04:00:PM Time

Date and Time Received by The Engineer		**Incoming Ref. No.**		
Engineer's (Consultant) Name		Signature	Date	Time

ENGINEER'S COMMENTS

Coordination of Other Disciplines by the Engineer	Engineer's Technical Team Comments			
Electrical Inspection				
☐ Yes ☐ No ☐ Not applicable	Name	Signature	Date	Time
Mechanical Inspection				
☐ Yes ☐ No ☐ Not applicable	Name	Signature	Date	Time
Civil and Survey Inspection				
☐ Yes ☐ No ☐ Not applicable	Name	Signature	Date	Time
Civil and Survey Inspection				
☐ Yes ☐ No ☐ Not applicable	Name	Signature	Date	Time

Checking and approval by The Engineer shall not relieve the Contractor of its obligation to perform the work in accordance with the contract documents, health and safety requirements and local authority

Engineer's Authorized Representative Comments:

Installation flooring tiles FL-02 is Approved with conditions:
1.) subject to comply with project specifications, drawings and authority regulations and requirements.
2.) The corner area at rounded glass and glass door is not accepted and need re-installed.

Attachments	☐ Photos	☐ Others (specify)

APPROVAL STATUS	☐ Code 1	☐ Code 2	☐ Code 3	☐ Code 4	☐ For Information Only
Engineer's Authorized Representative Name	Qussay Al Asaad 31.01.2022			Signature, Date and Stamp	
			Outgoing Ref. No.		

CONTRACTOR RECEIVED SIGNATURE

Date		Signature and Stamp	

DOCUMENT STATUS
Code 1 - Approved.
Code 2 - Approved as noted, work may proceed subject to incorporation of comments indicated.
Code 3 - Revise & resubmit.
Code 4 - Rejected
Corrections or comments made relative to inspection do not relieve the contractor from compliance with the contract requirments and specfications.
Any amendments to this form should be approved by the Engineer and Dubai South prior to use by the contractor.

DUBAI SOUTH	AL BURJ Engineering Consultants	LOOTAH ENGINEERING AND CONSTRUCTION	**DESIGN & BUILD OF THE NOLUS**	**WORK INSPECTION REQUEST (WIR)**
				Reference No. **BP159-LEC-RQI-CIV-000033**
Originator of WIR	**SAIFULLAH KHAN**		**RFP 159/BP/21 in Bussines Park of Dubai South**	Rev. No **0**
				Date Submitted **27/01/2022**

DESCRIPTION

Location/Area of Inspection	Nolus Project	Drawing Number	BP159-LEC-SHD-CIV-000011
Specification Number	BP159-LEC-SHD-CIV-000011	Inspection Request No.	BP159-LEC-WIR-CIV-000034
Material Submittal Number	BP159-LEC-TAG-FNS-000006	Inspection Test Plan No.	N/A
Method Statement Number	BP159-LEC-MES-CIV-000010	Inspection Time	11:00 AM ON 28/01/2022
Authorised Signature			

Type of Work

- ☐ Architectural ☐ Structural ■ Mechanical ☐ HVAC ☐ Finishes
- ☐ Infrastructure ☐ Landscape ☐ Electrical ☐ Survey ☐ Others (specify)

Enclosure ■ Drawings ☐ Specification ☐ Test Report ☐ Checklist ☐ Others (specify)

Work Element to be Inspected	**For Concrete Works**	
INSPECTION REQUEST FOR INSTALLATION OF TOILET AND COUNTER WALL TILE AS PER ATTACHED DRAWING	Volume	N/A
	Cement: SRC/OPC	N/A
	Start Time	N/A
	Finish Time	N/A
	Temperature	N/A

Attachments

Type of Work

- ☐ QA/QC Checklist of Contractor ☐ Survey Data ☐ Contractor's Snag List
- ☐ Part Plan in A4 (highlighted) ☐ MEP Clearance ☐ Others (specify)

The Contractor hereby certifies that the works are executed in accordance with the approved drawings, specifations and local authority regulations.

Contractor's QA/QC Engineer Name	**SAIFULLAH KHAN**	Signature	27/01/2022 Date	04:00:PM Time
Contractor's Project Manager/Authorized Representative	**Omar Soliman**	Signature	27/01/2022 Date	04:00:PM Time

Date and Time Received by The Engineer		**Incoming Ref. No.**		
Engineer's (Consultant) Name		Signature	Date	Time

ENGINEER'S COMMENTS

Coordination of Other Disciplines by the Engineer	Engineer's Technical Team Comments			
Electrical Inspection				
☐ Yes ☐ No ☐ Not applicable	Name	Signature	Date	Time
Mechanical Inspection				
☐ Yes ☐ No ☐ Not applicable	Name	Signature	Date	Time
Civil and Survey Inspection				
☐ Yes ☐ No ☐ Not applicable	Name	Signature	Date	Time
Civil and Survey Inspection				
☐ Yes ☐ No ☐ Not applicable	Name	Signature	Date	Time

Checking and approval by The Engineer shall not relieve the Contractor of its obligation to perform the work in accordance with the contract documents, health and safety requirements and local authority

Engineer's Authorized Representative Comments:

No objection subject to comply with project specifications, drawings and authority regulations and requirements.
- To complete remaining works at toilet area (Vanity counter and doors partition)
- CT-01 behind Counter not yet delivered /installed.

Attachments	☐ Photos	☐ Others (specify)

APPROVAL STATUS	☐ Code 1	☐ Code 2	☐ Code 3	☐ Code 4	☐ For Information Only
Engineer's Authorized Representative Name					Signature, Date and Stamp
			Outgoing Ref. No.		

CONTRACTOR RECEIVED SIGNATURE

Date		Signature and Stamp	

DOCUMENT STATUS
Code 1 - Approved.
Code 2 - Approved as noted, work may proceed subject to incorporation of comments indicated.
Code 3 - Revise & resubmit.
Code 4 - Rejected
Corrections or comments made relative to inspection do not relieve the contractor from compliance with the contract requirments and specfications.
Any amendments to this form should be approved by the Engineer and Dubai South prior to use by the contractor.

DUBAI SOUTH / AL BURJ Engineering Consultants / LOOTAH Engineering and Construction	DESIGN & BUILD OF THE NOLUS	SHOP DRAWING SUBMITTAL	
		Reference No.	BP159-LEC-SHD-CIV-000011
	RFP 159/BP/21 in Bussines Park of Dubai South	Rev. No	1
		Date Submitted	20-Dec-21
Originator of Submittal	LOOTAH ENGINEERING AND CONSTRUCTION LLC	No. of hardcopies	Soft copy

REFERENCE NUMBER	DRAWING TITLE	DESCRIPTION
BP159-LEC-SHD-CIV-000018	Toilet (Male & Female) Tiling Layout @ Ground Floor	
BP159-LEC-SHD-CIV-000019	Toilet (Male & Female) Tiling Sectional Elevation # 01, 02, 03 & 04	
BP159-LEC-SHD-CIV-000020	Toilet (Male & Female) Tiling Sectional Elevation # 05 & 06	
BP159-LEC-SHD-CIV-000021	Toilet (Male & Female) Tiling Sectional Elevation # 07 & 08	

Contractor's Authorized Representative Name	Omar Soliman Technical Manager	Signature and Stamp

Contractor's Statement: ***We certify that the shop drawings drawings submitted herewith is prepared in details and reflects the actual as-built condition of the works and is prepared in compliance with the shop drawings, redline drawings and specifiction except as otherwise specfically stated hereabove.***

Received by Engineer's Authorized Representative Name		Signature, Date and Stamp

ENGINEER'S COMMENTS

Hardcopies - Date Received by Engineer		Incoming Ref. No., if applicable (to be filled by RE)	

Approved with conditions:

1) Subject to submit sample for CT-02 and approved by Client / Engineer.
2) See comments on the attached shop drawing.
3) subject to complete submission and approval of remaining items for tiles, sanitary ware, Ironmongery, LA-02.
4) This approval will not relieve Contractor from his liability.
5) Subject to no cost and time impact.

ENGINEER'S APPROVAL STATUS	☐ Code 1 ☒ Code 2 ☐ Code 3 ☐ Code 4 ☐ For Information Only	
Reviewed by Engineer's Technical Team (Name and Position)		Signature, Date
Engineer's Authorized Representative Name	Qussay Al Asaad 22.12.2021	Signature, Date and Stamp
Outgoing Ref. No., if applicable (to be filled by RE)		

CONTRACTOR RECEIVED SIGNATURE

Contractor's Authorized Representative Name		Signature and Stamp

DOCUMENT STATUS
Code 1 - Approved.
Code 2 - Approved as noted, work may proceed subject to incorporation of comments indicated.
Code 3 - Revise & resubmit.
Code 4 - Rejected
Corrections or comments made relative to submittals during this review do not relieve the contractor from compliance with the contract requirements and specfications.
Any amendments to this form should be approved by the Engineer and Dubai South prior to use by the contractor.

DUBAI SOUTH	AL BURJ Engineering Consultants / LOOTAH ENGINEERING AND CONSTRUCTION	**DESIGN & BUILD OF THE NOLUS**	**WORK INSPECTION REQUEST (WIR)**	
			Reference No.	**BP159-LEC-RQI-CIV-000032**
Originator of WIR	**SAIFULLAH KHAN**	**RFP 159/BP/21 in Bussines Park of Dubai South**	Rev. No	0
			Date Submitted	27/01/2022

DESCRIPTION

Location/Area of Inspection	Nolus Project	Drawing Number	BP159-LEC-SHD-CIV-000016
Specification Number	BP159-LEC-SHD-CIV-000016	Inspection Request No.	BP159-LEC-WIR-CIV-000033
Material Submittal Number	BP159-LEC-TAG-FNS-000003	Inspection Test Plan No.	N/A
Method Statement Number	BP159-LEC-MES-CIV-000010	Inspection Time	11:00 AM ON 28/01/2022
Authorised Signature			

Type of Work

- [ ] Architectural
- [ ] Structural
- [x] Mechanical
- [ ] HVAC
- [ ] Finishes
- [ ] Infrastructure
- [ ] Landscape
- [ ] Electrical
- [ ] Survey
- [ ] Others (specify)

Enclosure

- [x] Drawings
- [ ] Specification
- [ ] Test Report
- [ ] Checklist
- [ ] Others (specify)

Work Element to be Inspected	**For Concrete Works**	
INSPECTION REQUEST FOR INSTALLATION OF BOH KITCHEN AREA WALL TILE AS PER ATTACHED DRAWING	Volume	N/A
	Cement: SRC/OPC	N/A
	Start Time	N/A
	Finish Time	N/A
	Temperature	N/A

Attachments

Type of Work

- [ ] QA/QC Checklist of Contractor
- [ ] Survey Data
- [ ] Contractor's Snag List
- [ ] Part Plan in A4 (highlighted)
- [ ] MEP Clearance
- [ ] Others (specify)

The Contractor hereby certifies that the works are executed in accordance with the approved drawings, specifations and local authority regulations.

Contractor's QA/QC Engineer Name	**SAIFULLAH KHAN**	Signature	27/01/2022 Date	04:00:PM Time
Contractor's Project Manager/Authorized Representative	**Omar Soliman**	Signature	27/01/2022 Date	04:00:PM Time

Date and Time Received by The Engineer		**Incoming Ref. No.**		
Engineer's (Consultant) Name		Signature	Date	Time

ENGINEER'S COMMENTS

Coordination of Other Disciplines by the Engineer	Engineer's Technical Team Comments			
Electrical Inspection				
☐ Yes ☐ No ☐ Not applicable	Name	Signature	Date	Time
Mechanical Inspection				
☐ Yes ☐ No ☐ Not applicable	Name	Signature	Date	Time
Civil and Survey Inspection				
☐ Yes ☐ No ☐ Not applicable	Name	Signature	Date	Time
Civil and Survey Inspection				
☐ Yes ☐ No ☐ Not applicable	Name	Signature	Date	Time

Checking and approval by The Engineer shall not relieve the Contractor of its obligation to perform the work in accordance with the contract documents, health and safety requirements and local authority

Engineer's Authorized Representative Comments:

No objection subject to comply with project specifications, drawings and authority regulations and requirements.

Attachments	☐ Photos	☐ Others (specify)

APPROVAL STATUS	☐ Code 1	☐ Code 2	☐ Code 3	☐ Code 4	☐ For Information Only

Engineer's Authorized Representative Name	Qussay Al Asaad 31.01.2022	Signature, Date and Stamp
	Outgoing Ref. No.	

CONTRACTOR RECEIVED SIGNATURE

Date		Signature and Stamp	

DOCUMENT STATUS
Code 1 - Approved.
Code 2 - Approved as noted, work may proceed subject to incorporation of comments indicated.
Code 3 - Revise & resubmit.
Code 4 - Rejected
Corrections or comments made relative to inspection do not relieve the contractor from compliance with the contract requirments and specfications.
Any amendments to this form should be approved by the Engineer and Dubai South prior to use by the contractor.

DUBAI SOUTH	AL BURJ Engineering Consultants	LOOTAH ENGINEERING AND CONSTRUCTION	**DESIGN & BUILD OF THE NOLUS**	**WORK INSPECTION REQUEST (WIR)**
				Reference No. **BP159-LEC-RQI-CIV-000039**
Originator of WIR	**SAIFULLAH KHAN**		**RFP 159/BP/21 in Bussines Park of Dubai South**	Rev. No **0**
				Date Submitted **02/02/2022**

DESCRIPTION

Location/Area of Inspection	Nolus Project	Drawing Number	BP159-LEC-DWG-ARC-000063
Specification Number	BP159-LEC-DWG-ARC-000063	Inspection Request No.	BP159-LEC-WIR-CIV-000039
Material Submittal Number	BP159-LEC-TAG-ARC-000007	Inspection Test Plan No.	N/A
Method Statement Number	N/A	Inspection Time	2:00 PM ON 02/02/2022
Authorised Signature			

Type of Work

☐ Architectural ☐ Structural ■ Mechanical ☐ HVAC ☐ Finishes

☐ Infrastructure ☐ Landscape ☐ Electrical ☐ Survey ☐ Others (specify)

Enclosure ■ Drawings ☐ Specification ☐ Test Report ☐ Checklist ☐ Others (specify)

Work Element to be Inspected	**For Concrete Works**	
INSPECTION REQUEST FOR APPLICATION PA 06 PAINT 2 COAT ON WALL IN TOILET AREA AS PER ATTACHED DRAWING	Volume	N/A
	Cement: SRC/OPC	N/A
	Start Time	N/A
	Finish Time	N/A
	Temperature	N/A

Attachments

Type of Work

☐ QA/QC Checklist of Contractor ☐ Survey Data ☐ Contractor's Snag List

☐ Part Plan in A4 (highlighted) ☐ MEP Clearance ☐ Others (specify)

The Contractor hereby certifies that the works are executed in accordance with the approved drawings, specifations and local authority regulations.

Contractor's QA/QC Engineer Name	**SAIFULLAH KHAN**	Signature	02/02/2022 Date	02:00:PM Time
Contractor's Project Manager/Authorized Representative	**Omar Soliman**	Signature	02/02/2022 Date	02:00:PM Time

Date and Time Received by The Engineer		**Incoming Ref. No.**		
Engineer's (Consultant) Name		Signature	Date	Time

ENGINEER'S COMMENTS

Coordination of Other Disciplines by the Engineer	Engineer's Technical Team Comments			
Electrical Inspection				
☐ Yes ☐ No ☐ Not applicable	Name	Signature	Date	Time
Mechanical Inspection				
☐ Yes ☐ No ☐ Not applicable	Name	Signature	Date	Time
Civil and Survey Inspection				
☐ Yes ☐ No ☐ Not applicable	Name	Signature	Date	Time
Civil and Survey Inspection				
☐ Yes ☐ No ☐ Not applicable	Name	Signature	Date	Time

Checking and approval by The Engineer shall not relieve the Contractor of its obligation to perform the work in accordance with the contract documents, health and safety requirements and local authority

Engineer's Authorized Representative Comments:

Approved with conditions:
- Subject to apply final coat after completion furnished all toilets

Attachments	☐ Photos	☐ Others (specify)			
APPROVAL STATUS	☐ Code 1	☐ Code 2	☐ Code 3	☐ Code 4	☐ For Information Only
Engineer's Authorized Representative Name	Qussay Al Asaad 03.02.2022			Signature, Date and Stamp	
			Outgoing Ref. No.		

CONTRACTOR RECEIVED SIGNATURE

Date		**Signature and Stamp**	

DOCUMENT STATUS
Code 1 - Approved.
Code 2 - Approved as noted, work may proceed subject to incorporation of comments indicated.
Code 3 - Revise & resubmit.
Code 4 - Rejected
Corrections or comments made relative to inspection do not relieve the contractor from compliance with the contract requirments and specfications.
Any amendments to this form should be approved by the Engineer and Dubai South prior to use by the contractor.

DUBAI SOUTH	AL BURJ Engineering Consultants / LOOTAH ENGINEERING AND CONSTRUCTION	**DESIGN & BUILD OF THE NOLUS**	**WORK INSPECTION REQUEST (WIR)**	
			Reference No.	**BP159-LEC-RQI-CIV-000038**
Originator of WIR	**SAIFULLAH KHAN**	**RFP 159/BP/21 in Bussines Park of Dubai South**	Rev. No	**0**
			Date Submitted	**02/02/2022**

DESCRIPTION

Location/Area of Inspection	Nolus Project	Drawing Number	BP159-LEC-DWG-ARC-000063
Specification Number	BP159-LEC-DWG-ARC-000063	Inspection Request No.	BP159-LEC-WIR-CIV-000038
Material Submittal Number	BP159-LEC-TAG-FNS-000021	Inspection Test Plan No.	N/A
Method Statement Number	N/A	Inspection Time	2:00 PM ON 02/02/2022
Authorised Signature			

Type of Work

- ☐ Architectural ☐ Structural ■ Mechanical ☐ HVAC ☐ Finishes
- ☐ Infrastructure ☐ Landscape ☐ Electrical ☐ Survey ☐ Others (specify)

Enclosure ■ Drawings ☐ Specification ☐ Test Report ☐ Checklist ☐ Others (specify)

Work Element to be Inspected	**For Concrete Works**	
INSPECTION REQUEST FOR APPLICATION PA 01 CONCRETE FINISH PAINT ON WALL IN COUNTER AREA , GRAB AND GO AREA CORRIDOR AND PLANTER AS PER ATTACHED DRAWING	Volume	N/A
	Cement: SRC/OPC	N/A
	Start Time	N/A
	Finish Time	N/A
	Temperature	N/A

Attachments

Type of Work

- ☐ QA/QC Checklist of Contractor ☐ Survey Data ☐ Contractor's Snag List
- ☐ Part Plan in A4 (highlighted) ☐ MEP Clearance ☐ Others (specify)

The Contractor hereby certifies that the works are executed in accordance with the approved drawings, specifations and local authority regulations.

Contractor's QA/QC Engineer Name	**SAIFULLAH KHAN**	Signature	02/02/2022 Date	02:00:PM Time
Contractor's Project Manager/Authorized Representative	**Omar Soliman**	Signature	02/02/2022 Date	02:00:PM Time

Date and Time Received by The Engineer		**Incoming Ref. No.**		
Engineer's (Consultant) Name		Signature	Date	Time

ENGINEER'S COMMENTS

Coordination of Other Disciplines by the Engineer	Engineer's Technical Team Comments			
Electrical Inspection				
☐ Yes ☐ No ☐ Not applicable	Name	Signature	Date	Time
Mechanical Inspection				
☐ Yes ☐ No ☐ Not applicable	Name	Signature	Date	Time
Civil and Survey Inspection				
☐ Yes ☐ No ☐ Not applicable	Name	Signature	Date	Time
Civil and Survey Inspection				
☐ Yes ☐ No ☐ Not applicable	Name	Signature	Date	Time

Checking and approval by The Engineer shall not relieve the Contractor of its obligation to perform the work in accordance with the contract documents, health and safety requirements and local authority

Engineer's Authorized Representative Comments:

Approved with conditions:
1.) See comments on the attached drawings (some areas not yet completed and other texture not rectified)
2.) Protection is required and is under main contractor responsibility

Attachments	☐ Photos	☐ Others (specify)

APPROVAL STATUS	☐ Code 1	☐ Code 2	☐ Code 3	☐ Code 4	☐	**For Information Only**

Engineer's Authorized Representative Name	Qussay Al Asaad 03.02.2022	Signature, Date and Stamp
	Outgoing Ref. No.	

CONTRACTOR RECEIVED SIGNATURE

Date		**Signature and Stamp**	

DOCUMENT STATUS
Code 1 - Approved.
Code 2 - Approved as noted, work may proceed subject to incorporation of comments indicated.
Code 3 - Revise & resubmit.
Code 4 - Rejected
Corrections or comments made relative to inspection do not relieve the contractor from compliance with the contract requirments and specfications.
Any amendments to this form should be approved by the Engineer and Dubai South prior to use by the contractor.

DUBAI SOUTH	AL BURJ Engineering Consultants	LOOTAH ENGINEERING AND CONSTRUCTION	**DESIGN & BUILD OF THE NOLUS**	**WORK INSPECTION REQUEST (WIR)**
				Reference No. **BP159-LEC-RQI-CIV-000040**
Originator of WIR	**SAIFULLAH KHAN**		**RFP 159/BP/21 in Bussines Park of Dubai South**	Rev. No **0**
				Date Submitted **02/02/2022**

DESCRIPTION

Location/Area of Inspection	Nolus Project	Drawing Number	BP159-LEC-SHD-CIV-000040,000041,000042,000043
Specification Number	BP159-LEC-SHD-CIV-000040,000041,000042,000043	Inspection Request No.	BP159-LEC-WIR-CIV-000040
Material Submittal Number	BP159-LEC-MAT-CIV-000016	Inspection Test Plan No.	N/A
Method Statement Number	BP159-LEC-MES-CIV-000012	Inspection Time	11:00 AM ON 2/02/2022
Authorised Signature			

Type of Work

- [ ] Architectural
- [ ] Structural
- [x] Mechanical
- [ ] HVAC
- [ ] Finishes
- [ ] Infrastructure
- [ ] Landscape
- [ ] Electrical
- [ ] Survey
- [ ] Others (specify)

Enclosure

- [x] Drawings
- [ ] Specification
- [ ] Test Report
- [ ] Checklist
- [ ] Others (specify)

Work Element to be Inspected	**For Concrete Works**	
INSPECTION REQUEST FOR INSTALLATION OF CEILING GYPSUM BOARD CLOSING IN SEATING AREA AND BAR AREA B/W GRID LINE 2-5'/A-B AS PER ATTACHED DRAWING	Volume	N/A
	Cement: SRC/OPC	N/A
	Start Time	N/A
	Finish Time	N/A
	Temperature	N/A

Attachments

Type of Work

- [ ] QA/QC Checklist of Contractor
- [ ] Survey Data
- [ ] Contractor's Snag List
- [ ] Part Plan in A4 (highlighted)
- [ ] MEP Clearance
- [ ] Others (specify)

The Contractor hereby certifies that the works are executed in accordance with the approved drawings, specifations and local authority regulations.

Contractor's QA/QC Engineer Name	**SAIFULLAH KHAN**	Signature	02/02/2022 Date	11:00:AM Time
Contractor's Project Manager/Authorized Representative	**Omar Soliman**	Signature	02/02/2022 Date	11:00:AM Time

Date and Time Received by The Engineer		**Incoming Ref. No.**		
Engineer's (Consultant) Name		Signature	Date	Time

ENGINEER'S COMMENTS

Coordination of Other Disciplines by the Engineer	Engineer's Technical Team Comments			
Electrical Inspection				
☐ Yes ☐ No ☐ Not applicable	Name	Signature	Date	Time
Mechanical Inspection				
☐ Yes ☐ No ☐ Not applicable	Name	Signature	Date	Time
Civil and Survey Inspection				
☐ Yes ☐ No ☐ Not applicable	Name	Signature	Date	Time
Civil and Survey Inspection				
☐ Yes ☐ No ☐ Not applicable	Name	Signature	Date	Time

Checking and approval by The Engineer shall not relieve the Contractor of its obligation to perform the work in accordance with the contract documents, health and safety requirements and local authority

Engineer's Authorized Representative Comments:

Approved with conditions:
1.) MEP clearance to be attached.
2.) Suspension system for track lights metal shelve to be done as specified and is under Contractor responsibility.

Attachments	☐ Photos	☐ Others (specify)

APPROVAL STATUS	☐ Code 1	☐ Code 2	☐ Code 3	☐ Code 4	☐ For Information Only

Engineer's Authorized Representative Name	Qussay Al Asaad 03.02.2022	Signature, Date and Stamp
	Outgoing Ref. No.	

CONTRACTOR RECEIVED SIGNATURE

Date		Signature and Stamp	

DOCUMENT STATUS
Code 1 - Approved.
Code 2 - Approved as noted, work may proceed subject to incorporation of comments indicated.
Code 3 - Revise & resubmit.
Code 4 - Rejected
Corrections or comments made relative to inspection do not relieve the contractor from compliance with the contract requirments and specfications.
Any amendments to this form should be approved by the Engineer and Dubai South prior to use by the contractor.

DUBAI SOUTH	AL BURJ Engineering Consultants / LOOTAH ENGINEERING AND CONSTRUCTION	**DESIGN & BUILD OF THE NOLUS**	**WORK INSPECTION REQUEST (WIR)**	
			Reference No.	**BP159-LEC-RQI-CIV-000027**
Originator of WIR	**SAIFULLAH KHAN**	**RFP 159/BP/21 in Bussines Park of Dubai South**	Rev. No	**0**
			Date Submitted	**19/01/2022**

DESCRIPTION

Location/Area of Inspection	Nolus Project	Drawing Number	BP159-LEC-SHD-CIV-000040,000041,000042,000043
Specification Number	BP159-LEC-SHD-CIV-000040,000041,000042,000043	Inspection Request No.	BP159-LEC-WIR-CIV-000028
Material Submittal Number	BP159-LEC-MAT-CIV-000016	Inspection Test Plan No.	N/A
Method Statement Number	BP159-LEC-MES-CIV-000012	Inspection Time	11:00 AM ON 20/01/2022
Authorised Signature			

Type of Work: ☐ Architectural ☐ Structural ■ Mechanical ☐ HVAC ☐ Finishes ☐ Infrastructure ☐ Landscape ☐ Electrical ☐ Survey ☐ Others (specify)

Enclosure: ■ Drawings ☐ Specification ☐ Test Report ☐ Checklist ☐ Others (specify)

Work Element to be Inspected	**For Concrete Works**	
INSPECTION REQUEST FOR INSTALLATION OF FALSE CEILING SUSPENSION SYSTEM PRIOR TO CLOSE GYPSUM BOARD IN SEATING AREA AND BAR AREA B/W GRID LINE 2-5'/A-B AS PER ATTACHED DRAWING	Volume	N/A
	Cement: SRC/OPC	N/A
	Start Time	N/A
	Finish Time	N/A
	Temperature	N/A

Attachments

Type of Work: ☐ QA/QC Checklist of Contractor ☐ Survey Data ☐ Contractor's Snag List ☐ Part Plan in A4 (highlighted) ☐ MEP Clearance ☐ Others (specify)

The Contractor hereby certifies that the works are executed in accordance with the approved drawings, specifations and local authority regulations.

Contractor's QA/QC Engineer Name	**SAIFULLAH KHAN**	Signature	19/01/2022 Date	04:00:PM Time
Contractor's Project Manager/Authorized Representative	**ARUN MAURYA**	Signature	19/01/2022 Date	04:00:PM Time

Date and Time Received by The Engineer		**Incoming Ref. No.**		
Engineer's (Consultant) Name		Signature	Date	Time

ENGINEER'S COMMENTS

Coordination of Other Disciplines by the Engineer	Engineer's Technical Team Comments			
Electrical Inspection				
☐ Yes ☐ No ☐ Not applicable	Name	Signature	Date	Time
Mechanical Inspection				
☐ Yes ☐ No ☐ Not applicable	Name	Signature	Date	Time
Civil and Survey Inspection				
☐ Yes ☐ No ☐ Not applicable	Name	Signature	Date	Time
Civil and Survey Inspection				
☐ Yes ☐ No ☐ Not applicable	Name	Signature	Date	Time

Checking and approval by The Engineer shall not relieve the Contractor of its obligation to perform the work in accordance with the contract documents, health and safety requirements and local authority

Engineer's Authorized Representative Comments:

1) Bar areas not yet completed.
2) Bar area - Electrical tranks has to be raised above false ceiling level.
3) Bulkhead not yet completed.
4) All required suspondens for decorative ceiling and light fittings to be completed prior close false ceiling.
5) MEP Clearance to be provided prior close false ceiling.

Attachments	☐ Photos	☐ Others (specify)

APPROVAL STATUS	☐ Code 1	☐ Code 2	☐ Code 3	☐ Code 4	☐ For Information Only

Engineer's Authorized Representative Name	Qussay Al Asaad 20.01.2022	Signature, Date and Stamp
	Outgoing Ref. No.	

CONTRACTOR RECEIVED SIGNATURE

Date		Signature and Stamp	

DOCUMENT STATUS
Code 1 - Approved.
Code 2 - Approved as noted, work may proceed subject to incorporation of comments indicated.
Code 3 - Revise & resubmit.
Code 4 - Rejected
Corrections or comments made relative to inspection do not relieve the contractor from compliance with the contract requirments and specfications.
Any amendments to this form should be approved by the Engineer and Dubai South prior to use by the contractor.

EMAAR | mirage | wsp | Shapoorji Pallonji | AIG

MATERIAL INSPECTION REQUEST (ID)

VIDA DUBAI MALL ON PLOT 132-133 - DOWNTOWN DEVELOPMENT

Employer:	EMAAR DEVELOPMENT PJSC	**Project Manager:**	MIRAGE PROJECT MANAGEMENT SERVICES [MGI]
Supervision Consultant:	WSP MIDDLE EAST LTD [WSP]	**Supervision Architect:**	AEDAS/ WSP SUB CONSULTANT
Cost Manager:		**Main Contractor:**	SHAPOORJI PALLONJI MIDEAST. [SPML]

Discipline:	Civil	Struct	Arch	Finish	Land scape	ID	**Submittal Ref:**	**SPML-VDM-ID-MIR-0730**	**REV. 00**
Requested Date:	**06/09/2022**						**Date of Inspection:**	**07/09/2022**	
							Time of Inspection:	**10AM**	
Location:	**TOWER 1**						**Building:**	**TOWER 1**	
Level:	**GROUND FLOOR**						**Activity:**	**GYPROC**	
Material Description:	**Material Inspection for Gyproc, Sealant 255ml, Joint Compound 28kg., Paper Tape 150m, Gypsum Board 2400x12.5mm RG, Joint Compound 28kg, As per attached delivery Note Number QUS-9186**								
Attached:	**Checklist ☐**			**Sketches ☐**		**Others ☐** *(Delivery Note & Approved Mat Sub)*			

Compliance Statement:

The Contractor hereby confirms that the Materials offered for inspection are ready and complies with Contract documents. Adequate HSE measures are in place for storage

PROJECT MANAGER / PROJECT ENGINEER

Name & Signature: Date:

CONTRACTOR'S QA/QC ENGINEER:
(Comments

Name & Signature: Date: 06/09/22

REVIEWER'S COMMENTS

WSP (Str) **ID/Architects**

1. No objection, materials checked randomly and found acceptable.
2. Ensure the presented materials fully comply with approved material submittal.
3. Quantity were not verified.
4. Contractor to ensure to have proper storage area for the inspected materials.
5. See attached photos of MIR

Name, Signature and date
Comments Sheet Attached? Yes ☐ No ☐

Name, Signature and date wsp ARNEL CASTILLO 07/09/2022
Comments Sheet Attached? Yes ☐ No ☐

SUPERVISION CONSULTANT A☐ B■ C☐ D☐

Name & Signature: Date:

Note: The Engineer's / Consultant's approval shall not in any way relieve the Contractor of his obligation under the Contract. The Contractor shall be solely responsible for the soundness and the correctness of the submitted Materials and Documents as per the required Contract Conditions and Contract Clauses. Consultants' comments on the Inspection requests shall not be construed as instruction to vary the scope of Contractor by whatsoever means

Codes: A: No Objection B: No Objection subject to comments C: Rejected, Revise & Resubmit D: For Information

MATERIAL INSPECTION REQUEST (ID)

VIDA DUBAI MALL ON PLOT 132-133 - DOWNTOWN DEVELOPMENT

Employer:	EMAAR DEVELOPMENT PJSC	Project Manager:	MIRAGE PROJECT MANAGEMENT SERVICES [MGI].
Supervision Consultant:	WSP MIDDLE EAST LTD [WSP]	Supervision Architect:	AEDAS/ WSP SUB CONSULTANT
Cost Manager:		Main Contractor:	SHAPOORJI PALLONJI MIDEAST. [SPML]

Discipline:	Civil	Struct	Arch	Finish	Land scape	ID	Submittal Ref:	SPML-VDM-ID-MIR-0705	REV. 00
Requested Date:	30/08/2022						Date of Inspection:	31/08/2022	
							Time of Inspection:	10AM	
Location:	TOWER 1						Building:	TOWER 1	
Level:	Mezzanine						Activity:	GYPROC	
Material Description:	Material Inspection for Gyproc, Wafer Head Screw 13mm, Gyproc Wedge Anchor 40mm, Gypframe MF5 Furing Channel 0.5x3000mm, Gypframe MF7 Main Channel 0.5x3000mm, Gypframe GA1 Angle 0.5x3000mm, Jack Point Wafer Head Screw 13mm, Drywall Screw 25mm, As per attached delivery Note Number QUS-9083								
Attached:	Checklist ☐			Sketches ☐			Others ☐ *(Delivery Note & Approved Mat Sub)*		

Compliance Statement:
The Contractor hereby confirms that the Materials offered for inspection are ready and complies with Contract documents. Adequate HSE measures are in place for storage

PROJECT MANAGER / PROJECT ENGINEER

Name & Signature: Date:

CONTRACTOR'S QA/QC ENGINEER:
(Comments

Name & Signature: Date: 30/08/22

VIDA DUBAI MALL Shapoorji Pallonji Mideast (L.L.C.)

REVIEWER'S COMMENTS

WSP (Str)
1. No objection, materials checked randomly and found acceptable.
2. Ensure the presented materials fully comply with approved material submittal.
3. Quantity were not verified.
4. Contractor to ensure to have proper storage area for the inspected materials.
5. See attached photos of MIR , To include G-frame

Name, Signature and date
Comments Sheet Attached? Yes ☐ No ☐

Architects

wsp ARNEL CASTILLO 31/08/2022

Name, Signature and date
Comments Sheet Attached? Yes ☐ No ☐

SUPERVISION CONSULTANT A☐ B■ C☐ D☐

Name & Signature: Date:

Note: The Engineer's / Consultant's approval shall not in any way relieve the Contractor of his obligation under the Contract. The Contractor shall be solely responsible for the soundness and the correctness of the submitted Materials and Documents as per the required Contract Conditions and Contract Clauses. Consultants' comments on the Inspection requests shall not be construed as instruction to vary the scope of Contractor by whatsoever means

Codes: A: No Objection B: No Objection subject to comments C: Rejected, Revise & Resubmit D: For Information

MATERIAL INSPECTION REQUEST (ID)

VIDA DUBAI MALL ON PLOT 132-133 - DOWNTOWN DEVELOPMENT

Employer:	EMAAR DEVELOPMENT PJSC	**Project Manager:**	MIRAGE PROJECT MANAGEMENT SERVICES [MGI]
Supervision Consultant:	WSP MIDDLE EAST LTD [WSP]	**Supervision Architect:**	AEDAS/ WSP SUB CONSULTANT
Cost Manager:		**Main Contractor:**	SHAPOORJI PALLONJI MIDEAST. [SPML]

Discipline:	Civil	Struct	Arch	Finish	Land scape	ID	**Submittal Ref:**	**SPML-VDM-ID-MIR-0716**	**REV. 00**
Requested Date:	**02/09/2022**						**Date of Inspection:**	**05/09/2022**	
							Time of Inspection:	**10AM**	
Location:	**TOWER 1**						**Building:**	**TOWER 1**	
Level:	**MEZZANINE**						**Activity:**	**GYPROC**	
Material Description:	**Material Inspection for Gyproc, Gypsum Board,Gypframe, Wafer Head Screw,Dry Wall ScrewJack Point Wafer Head Screw, As per attached delivery Note Number QUS-9167**								
Attached:	**Checklist** ☐			**Sketches** ☐		**Others** ☐ *(Delivery Note & Approved Mat Sub)*			

Compliance Statement:

The Contractor hereby confirms that the Materials offered for inspection are ready and complies with Contract documents. Adequate HSE measures are in place for storage

PROJECT MANAGER / PROJECT ENGINEER

Name & Signature: Date:

CONTRACTOR'S QA/QC ENGINEER:

(Comments

Name & Signature: Date: 03/09/22

REVIEWER'S COMMENTS

WSP (Str)

1. No objection, materials checked randomly and found acceptable.
2. Ensure the presented materials fully comply with approved material submittal.
3. Quantity were not verified.
4. Contractor to ensure to have proper storage area for the inspected materials.
5. See attached photos of MIR , To include G-frame

Name, Signature and date

Comments Sheet Attached? Yes ☐ No ☐

Architects

Name, Signature and date 05/09/2022

Comments Sheet Attached? Yes ☐ No ☐

SUPERVISION CONSULTANT A☐ B■ C☐ D☐

Name & Signature: Date:

Note: The Engineer's / Consultant's approval shall not in any way relieve the Contractor of his obligation under the Contract. The Contractor shall be solely responsible for the soundness and the correctness of the submitted Materials and Documents as per the required Contract Conditions and Contract Clauses. Consultants' comments on the Inspection requests shall not be construed as instruction to vary the scope of Contractor by whatsoever means

Codes: A: No Objection B: No Objection subject to comments C: Rejected, Revise & Resubmit D: For Information

DUBAI SOUTH	AL BURJ Engineering Consultants	LOOTAH ENGINEERING AND CONSTRUCTION	**DESIGN & BUILD OF THE NOLUS**	**SAMPLE TAG**	
				Reference No.	BP159-LEC-TAG-FNS-000020
Originator of Submittal	**Lootah Engineering and Construction LLC**		**RFP 159/BP/21 in Bussines Park of Dubai South**	Rev. No	1
				Date Submitted	16-Dec-21
Requested by	**Omar Soliman**				

MATERIAL DETAIL

Item Description	Material Sample for TS.02 Solid Wood
	Item Code: Solid Wood Type: Railway Sleeper Type Colour: Dark Brown Finish: Medium Matte with 15-20% Sheen Only Sealed
Area of Use	Bench
Contractor Statement	We certify that the material submitted herewith is a specimen of the material which is to be used in the areas described above, and in compliane with the contract drawings and specifications except as otherwise stated in the related Alternative Material Submittal Form. We undertake full responsibility to ensure that the material deliverd at site is the same as the approved sample.
Contractor's Authorized Representative Name	**Omar Soliman** **Technical Manager**
	Signature and Stamp

ENGINEER'S COMMENTS

Date Received by Engineer document controller and signature		**Incoming Ref. No.**	

No objection only for colour.

1- Detail shop drawings to be submitted.
2- Provide mock-up at site for final approval.
3- This approval not relieve Contractor from his liabiity.
4- Subject to no cost and time impact.

APPROVAL STATUS	☐ Code 1	☐ Code 2	☐ Code 3	☐ Code 4	☐ For Information Only
Engineer's Authorized Representative Name	Qussay Al Asaad 19.12.2021			Signature, Date and Stamp	

DUBAI SOUTH COMMENTS (To be filled up by DS Development Management Department)	
Date Received by DS document controller and signature	
NO Objection to the color & texture - Contractor to submit shop drawinng and mockup for detail - Contractor to ensure that the wood is treated properly so that it doesnt damage or swell with time - All the edges to be finishes and detailed properly	

APPROVAL STATUS	☐ Code 1	☐ Code 2	☐ Code 3	☐ Code 4	☐ For Information Only
Technical Team (Development Management) Reviewer Name and	Jaspinder Kaur			Signature and Date	
Design Manager Name				Signature and Date	
Project Manager Name				Signature and Date	
Outgoing Ref. No. (by RE)					

CONTRACTOR RECEIVED SIGNATURE			
Date		Signature and Stamp	

DOCUMENT STATUS
Code 1 - Approved.
Code 2 - Approved as noted, work may proceed subject to incorporation of comments indicated.
Code 3 - Revise & resubmit.
Code 4 - Rejected
Corrections or comments made relative to submittals during this review do not relieve the contractor from compliance with the contract requirments and specfications. This check is only for review of general conformance with the design concept of the project and general compliance with the information given in the contract documents.
Any amendments to this form should be approved by the Engineer and Dubai South prior to use by the contractor.

RD-158 Design and Build of The Shed in RD
Dubai South
Near Al Maktoum International Airport
Dubai
United Arab Emirates

MAIL TYPE	MAIL NUMBER	REFERENCE NUMBER
Workflow Transmittal	AWAJ-WTRAN-000201	AWAJ-WTRAN-000201

Final (WF-000322) Prequalification for Joinery Works (M/s Revoren)

From	Mr Sreeranj Kunnumel - Al Wasl Al Jadeed Consultants
To (3)	Mr Anwar Basha - Al Wasl Al Jadeed Consultants
	Mr Sreeranj Kunnumel - Al Wasl Al Jadeed Consultants
	Mr Babu Khan - Lootah Engineering and Construction LLC
Cc	Mr Moosa Syed - DUBAI SOUTH
Sent	Monday, 28 February 2022

MESSAGE

Workflow Review History

The attached documents have completed the "Prequalification for Joinery Works (M/s Revoren)" workflow with the following results :

This transmittal was automatically generated.

Doc No	Step	Participant	Review Outcome	Comments
RD158-LEC-PQD-IND-000001	QA Check	A Basha	QA Checked And Passed	
	Resident Engineer Review	S Kunnumel	Code 3	Contractors' valid Dubai trade licenses shall be submitted

DUBAI SOUTH	AL BURJ Engineering Consultants	LOOTAH ENGINEERING AND CONSTRUCTION	DESIGN & BUILD OF THE NOLUS	SAMPLE TAG	
				Reference	BP159-LEC-TAG-FNS-000005
Originator of Submittal	Lootah Engineering and Construction LLC		RFP 159/BP/21 in Bussines Park of Dubai South	Rev. No	1
				Date Submitted	22-Nov-21
Requested by	Arunkumar				

MATERIAL DETAIL

Item Description	Material Sample for CT.04 Wood Effect Tile (A99GZLNW#IV0.W2S5R Line Wood RAK Ceramics Ivory Light Structure, Matte Edge: Rectified Outdoor Suitable) (M/s Good Star)
Area of Use	External Wall Cladding
Contractor Statement	We certify that the material submitted herewith is a specimen of the material which is to be used in the areas described above, and in compliane with the contract drawings and specifications except as otherwise stated in the related Alternative Material Submittal Form. We undertake full responsibility to ensure that the material deliverd at site is the same as the approved sample
Contractor's Authorized Representative Name	Arunkumar Construction Manager
	Signature and Stamp

ENGINEER'S COMMENTS

Date Received by Engineer document controller and signature		Incoming Ref. No.	

Sample CT-04 Wood Effect Tile (Option 1 from Navarti) is approved subject to following.

1.) Contractor to expedite submit fixation details for external cladding.
2.) Subject to approve Mock-up at site.
3.) Contractor responsible to verifying materials delivered at site from any defects.

APPROVAL STATUS	☐ Code 1	☐ Code 2	☐ Code 3	☐ Code 4	☐ For Information Only
Engineer's Authorized Representative Name	Qussay Al Asaad 24.11.2021			Signature, Date and Stamp	

DUBAI SOUTH COMMENTS (To be filled up by DS Development Management Department)	
Date Received by DS document controller and signature	
Tile - Option 1 from Navrati is acceptable subject to technical submittal review and approval	
Thickness Subject to fixation method to be Mechanical fixation	
Cobtractor to assure the Manufacturer details as	

APPROVAL STATUS	☐ Code 1	☐ Code 2	☐ Code 3	☐ Code 4	☐ For Information Only
Technical Team (Development Management) Reviewer Name and				Signature and Date	
Design Manager Name				Signature and Date	
Project Manager Name				Signature and Date	
Outgoing Ref. No. (by RE)					

CONTRACTOR RECEIVED SIGNATURE			
Date		Signature and Stamp	

DOCUMENT STATUS
Code 1 - Approved.
Code 2 - Approved as noted, work may proceed subject to incorporation of comments indicated.
Code 3 - Revise & resubmit.
Code 4 - Rejected
Corrections or comments made relative to submittals during this review do not relieve the contractor from compliance with the contract requirments and specfications. This check is only for review of general conformance with the design concept of the project and general compliance with the information given in the contract documents.
Any amendments to this form should be approved by the Engineer and Dubai South prior to use by the contractor.

DUBAI SOUTH	AL BURJ Engineering Consultants	LOOTAH ENGINEERING AND CONSTRUCTION	**DESIGN & BUILD OF THE NOLUS**	**SAMPLE TAG**	
				Reference No.	BP159-LEC-TAG-FNS-000014
Originator of Submittal	**Lootah Engineering and Construction LLC**		**RFP 159/BP/21 in Bussines Park of Dubai South**	Rev. No	0
				Date Submitted	05-Dec-21
Requested by	**Omar Soliman**				

MATERIAL DETAIL

Item Description	**Material Sample for FA.06 Leather** Item Code: 401ANT4/204 Design: Antique Colour: 204 Moss Width: 140.0 cms Sample ID: 411645 Supplier: M/s Revoren Manufecture: M/s Panaz
Area of Use	Seat Pad
Contractor Statement	We certify that the material submitted herewith is a specimen of the material which is to be used in the areas described above, and in compliane with the contract drawings and specifications except as otherwise stated in the related Alternative Material Submittal Form. We undertake full responsibility to ensure that the material deliverd at site is the same as the approved sample
Contractor's Authorized Representative Name	**Omar Soliman** **Technical Manager**
	Signature and Stamp

ENGINEER'S COMMENTS

Date Received by Engineer document controller and signature		**Incoming Ref. No.**	

No Objection for sample FA-06 subject to revise-resubmite samples of FA-02 & FA-03

APPROVAL STATUS	☐ Code 1	☐ Code 2	☐ Code 3	☐ Code 4	☐ For Information Only
Engineer's Authorized Representative Name	Qussay Al Asaad 07.12.2021				Signature, Date and Stamp

DUBAI SOUTH COMMENTS (To be filled up by DS Development Management Department)	
Date Received by DS document controller and signature	

APPROVAL STATUS	☐ Code 1	☐ Code 2	☐ Code 3	☐ Code 4	☐ For Information Only
Technical Team (Development Management) Reviewer Name and					Signature and Date
Design Manager Name					Signature and Date
Project Manager Name					Signature and Date
				Outgoing Ref. No. (by RE)	

CONTRACTOR RECEIVED SIGNATURE			
Date		Signature and Stamp	

DOCUMENT STATUS
Code 1 - Approved.
Code 2 - Approved as noted, work may proceed subject to incorporation of comments indicated.
Code 3 - Revise & resubmit.
Code 4 - Rejected
Corrections or comments made relative to submittals during this review do not relieve the contractor from compliance with the contract requirments and specfications. This check is only for review of general conformance with the design concept of the project and general compliance with the information given in the contract documents.
Any amendments to this form should be approved by the Engineer and Dubai South prior to use by the contractor.

DUBAI SOUTH	AL BURJ Engineering Consultants	LOOTAH ENGINEERING AND CONSTRUCTION	**DESIGN & BUILD OF THE NOLUS**	**SAMPLE TAG**	
				Reference No.	BP159-LEC-TAG-FNS-000016
Originator of Submittal	**Lootah Engineering and Construction LLC**		**RFP 159/BP/21 in Bussines Park of Dubai South**	Rev. No	0
				Date Submitted	05-Dec-21
Requested by	**Omar Soliman**				

MATERIAL DETAIL

Item Description	**Material Sample for FA.03 Fabric**
	Item Code: 430LUX3/211 Design: Luxe Performance Velvet Colour: 211 Spruce Width: 140.0 cms Sample ID: 387158 Supplier: M/s Revoren Manufecture: M/s Panaz
Area of Use	Furniture Upholstery
Contractor Statement	We certify that the material submitted herewith is a specimen of the material which is to be used in the areas described above, and in compliane with the contract drawings and specifications except as otherwise stated in the related Alternative Material Submittal Form. We undertake full responsibility to ensure that the material deliverd at site is the same as the approved sample
Contractor's Authorized Representative Name	**Omar Soliman** **Technical Manager**
	Signature and Stamp

ENGINEER'S COMMENTS

Date Received by Engineer document controller and signature		**Incoming Ref. No.**	

Alternative acceptable

APPROVAL STATUS	☐ Code 1	☐ Code 2	☐ Code 3	☐ Code 4	☐ For Information Only
Engineer's Authorized Representative Name	Qussay Al asaad 07.12.2021				Signature, Date and Stamp

DUBAI SOUTH COMMENTS (To be filled up by DS Development Management Department)	
Date Received by DS document controller and signature	
alternative acceptable	

APPROVAL STATUS	☐ Code 1	☐ Code 2	☐ Code 3	☐ Code 4	☐ For Information Only
Technical Team (Development Management) Reviewer Name and					Signature and Date
Design Manager Name					Signature and Date
Project Manager Name					Signature and Date
				Outgoing Ref. No. (by RE)	

CONTRACTOR RECEIVED SIGNATURE			
Date		Signature and Stamp	

DOCUMENT STATUS
Code 1 - Approved.
Code 2 - Approved as noted, work may proceed subject to incorporation of comments indicated.
Code 3 - Revise & resubmit.
Code 4 - Rejected
Corrections or comments made relative to submittals during this review do not relieve the contractor from compliance with the contract requirments and specfications. This check is only for review of general conformance with the design concept of the project and general compliance with the information given in the contract documents.
Any amendments to this form should be approved by the Engineer and Dubai South prior to use by the contractor.

				MATERIAL SUBMITTAL FORM	
DUBAI SOUTH	AL BURJ Engineering Consultants	LOOTAH ENGINEERING AND CONSTRUCTION	DESIGN & BUILD OF THE NOLUS	Reference No.	BP159-LEC-MAT-CIV-000016
				Rev. No.	0
Originator of Submittal	Lootah Engineering and Construction LLC		RFP 159/BP/21 in Bussines Park of Dubai South	Date	14 November 2021

Item	Description	Discipline		List of Enclosure
Specifications Reference		(Tick as Applicable)		
		☐ Infrastructure	■	Prequalification Documents
BOQ Reference		☐ Architectural	■	Trade License
		☐ Structural	■	Vendor's Technical Literature
Drawing Reference	BP159-LEC-DWG-ARC-000061	☐ Mechanical	■	List of Previous Projects Done
Material Specified	Material Submittal & Sampel of False Ceiling and Bulkhead	☐ Electrical	☐	Compliance Statement Sheet (*)
	with Accessories	☐ HVAC	☐	Method Statement
Material Proposed	Knauf Regular Gypsum Board (RG)	☐ Plumbing	■	Previous Test Results
	Knauf Fire & Moisture Resistant Gypsum Board (FM)	☐ Finishes	☐	Copy of the Related Specifications
Manufacturer/Supplier	Multicore Technical Services LLC	☐ External Works	■	Sample with Sample Tag(**)
Address of Manufacturer	P.O. Box 717407, Al Dubai, U.A.E	■ Civil Works	☐	Shop Drawings (if applicable)
Contractor Remarks		☐ Landscaping	☐	Others (specify)
Date Required on Site				
Expected Date of Arrival of Material on Site:		Expected Date of Material Submittal Documents to RE:		
Notes:	*Compliance statement sheet covering each paragraph and subparagraph of the specification and deviations should be clearly marked. Advantages/disadvantages betweent the specified and proposed to be mentioned. This statement must be attached to the relevant submittal form. **Samples should be presented on a sample board suitably identified with labels. Where it is not possible to present a sample on sample board due to size constraints, sample tag should be attached properly. Photos of samples should be be included in the submittal. All document submissions should be include one Original along with a soft copy in PDF Format with this submission. When a resubmission is made based on The Engineer's comments, the compliance/reply to each comment should be clearly mentioned point by point. The specified format should be filled in accordinly and attached to the submittal form.			
Contractor Statement	***We certify that the material specified herewith has been reviewed in detail and is in compliance with the contract drawings and specifications except as otherwise stated above.***			
Contractor's Authorized Representative Name	Arunkumar Construction Manager	Signature and Stamp		

ENGINEER'S COMMENTS
Incoming Ref. No. , if applicable (to be filled by RE)
Knauf Regular Gypsum board & Knauf moisture resistant Gypsum board with accessories is approved with conditions as follows:
1.) Subject to comply with project, specifications, green building and authorities regulations and requirements.
2.) Shadow angle gap to be used for all areas.
3.) Submit to shop drawings for False ceiling with required details.
4.) The proposed material from Knauf should Antifungal and Antibacterial material as per Finishes Schedules.
5.) Concerned area to use this material should be mentioned.
6.) This approval is not relieve Contractor from his liability.
Continued on next page…

ENGINEER'S APPROVAL STATUS	☐ Code 1	☐ Code 2	☐ Code 3	☐ Code 4	☐ For Information Only
RE Technical Team Review Name and Position					Signature, Date and Stamp
Engineer's Authorized Representative Name	Qussay Al Asaad 17.11.2021				Signature, Date and Stamp

DUBAI SOUTH COMMENTS (To be filled up by DS Development Management Department)

1) The gypsum board thickness to be 12.5 mm .
2) Restaurant area to be painted black PA-03
3) Toilet areas to be moisture resistant (anti fungus + anti bacterial) to be painted
4) Substructure for the Gypsum ceiling to be coordinated with main structure
5) Provide all connection details , curtain wall , palmet , bulkhead above the counter , wall cabinets
6) shadow gap detail to be cordinated , provide shop drawings

DUBAI SOUTH APPROVAL STATUS	☐ Code 1	☐ Code 2	☐ Code 3	☐ Code 4	☐ For Information Only
Technical Team (Development Management) Reviewer Name and Position					Signature and Date
Design Manager Name					Signature and Date
Project Manager Name					Signature and Date
Outgoing Ref. No., if applicable (to be filled by RE)					

CONTRACTOR RECEIVED SIGNATURE			
Date		Signature and Stamp	

DOCUMENT STATUS
Code 1 - Approved.
Code 2 - Approved as noted, work may proceed subject to incorporation of comments indicated.
Code 3 - Revise & resubmit.
Code 4 - Rejected
Corrections or comments made relative to submittals during this review do not relieve the contractor from compliance with the contract requirments and specfications. This check is only for review of general conformance with the design concept of the project and general compliance with the information given in the contract documents.
Any amendments to this form should be approved by the Engineer and Dubai South prior to use by the contractor.

DUBAI SOUTH	AL BURJ Engineering Consultants / LOOTAH ENGINEERING AND CONSTRUCTION	DESIGN & BUILD OF THE NOLUS	SAMPLE TAG	
			Reference	BP159-LEC-TAG-ARC-000002
Originator of Submittal	Lootah Engineering and Construction LLC	RFP 159/BP/21 in Bussines Park of Dubai South	Rev. No	1
			Date Submitted	11-Nov-21
Requested by	Arunkumar			

MATERIAL DETAIL

Item Description	Material Sample for ST.01 Marble
Area of Use	Counter Tops
Contractor Statement	We certify that the material submitted herewith is a specimen of the material which is to be used in the areas described above, and in compliane with the contract drawings and specifications except as otherwise stated in the related Alternative Material Submittal Form. We undertake full responsibility to ensure that the material deliverd at site is the same as the approved sample
Contractor's Authorized Representative Name	Arunkumar Construction Manager
	Signature and Stamp

ENGINEER'S COMMENTS

Date Received by Engineer document controller and signature		Incoming Ref. No.	

Material sample: Marquina Marble for Counter Tops No objection in principle subject to following:

1.) Subject to comply with project, specifications, green building and authorities regulations and requirements.

2.) Detail of Counter Tops should be submitted within Joinery shop drawings.

3.) Marble thickness and shape of edge (chamfer or round) should be finalized with detail shop drawings.

4.) This approval not relieve Contractor from his liability.

APPROVAL STATUS	☐ Code 1	☐ Code 2	☐ Code 3	☐ Code 4	☐ For Information Only
Engineer's Authorized Representative Name	Qussay Al Asaad 17.11.2921			Signature, Date and Stamp	

DUBAI SOUTH COMMENTS (To be filled up by DS Development Management Department)	
Date Received by DS document controller and signature	
Provide the details in the drawings	
Grains to be shown and cordinated on drawings	
Material to be inspected by consultant before delivering to site	

APPROVAL STATUS	☐ Code 1	☐ Code 2	☐ Code 3	☐ Code 4	☐ For Information Only
Technical Team (Development Management) Reviewer Name and				Signature and Date	
Design Manager Name				Signature and Date	
Project Manager Name				Signature and Date	
Outgoing Ref. No. (by RE)					

CONTRACTOR RECEIVED SIGNATURE			
Date		Signature and Stamp	

DOCUMENT STATUS
Code 1 - Approved.
Code 2 - Approved as noted, work may proceed subject to incorporation of comments indicated.
Code 3 - Revise & resubmit.
Code 4 - Rejected
Corrections or comments made relative to submittals during this review do not relieve the contractor from compliance with the contract requirments and specfications. This check is only for review of general conformance with the design concept of the project and general compliance with the information given in the contract documents.
Any amendments to this form should be approved by the Engineer and Dubai South prior to use by the contractor.

DUBAI SOUTH	AL BURJ Engineering Consultants	LOOTAH ENGINEERING AND CONSTRUCTION	**DESIGN & BUILD OF THE NOLUS**	**SAMPLE TAG**
			Reference	BP159-LEC-TAG-FNS-000003
Originator of Submittal	Lootah Engineering and Construction LLC	RFP 159/BP/21 in Bussines Park of Dubai South	Rev. No	0
			Date Submitted	14-Nov-21
Requested by	Nahla Taha			

MATERIAL DETAIL

Item Description	Material Sample for CT-03 BOH Tiles (M/s Al Namarek, Gold Star & Ceramic City)
Area of Use	CT-03:- BOH
Contractor Statement	We certify that the material submitted herewith is a specimen of the material which is to be used in the areas described above, and in compliane with the contract drawings and specifications except as otherwise stated in the related Alternative Material Submittal Form. We undertake full responsibility to ensure that the material deliverd at site is the same as the approved sample
Contractor's Authorized Representative Name	**Arunkumar** **Construction Manager**

Signature and Stamp

ENGINEER'S COMMENTS

Date Received by Engineer document controller and signature		**Incoming Ref. No.**	

Approved as noted:

1.) (Option 4) is approved

2.) Subject to comply with project, specification and authorities regulations and requirements.

3.) Shop drawings for Tiles works (Wall and Floor) should be submitted.

4.) This approval not relieve Contractor from his liability.

APPROVAL STATUS	☐ Code 1	☐ Code 2	☐ Code 3	☐ Code 4	☐ For Information Only
Engineer's Authorized Representative Name	Qussay Al Asaad 18.11.2021			Signature, Date and Stamp	

DUBAI SOUTH COMMENTS (To be filled up by DS Development Management Department)	
Date Received by DS document controller and signature	
In principle the sample is acceptable for Option 4 regarding shade	
Contractor to verify slip resistance for floor tiles along with technical specs	

APPROVAL STATUS	☐ Code 1	☐ Code 2	☐ Code 3	☐ Code 4	☐ For Information Only
Technical Team (Development Management) Reviewer Name and				Signature and Date	
Design Manager Name				Signature and Date	
Project Manager Name				Signature and Date	
Outgoing Ref. No. (by RE)					

CONTRACTOR RECEIVED SIGNATURE			
Date		Signature and Stamp	

DOCUMENT STATUS
Code 1 - Approved.
Code 2 - Approved as noted, work may proceed subject to incorporation of comments indicated.
Code 3 - Revise & resubmit.
Code 4 - Rejected
Corrections or comments made relative to submittals during this review do not relieve the contractor from compliance with the contract requirments and specfications. This check is only for review of general conformance with the design concept of the project and general compliance with the information given in the contract documents.
Any amendments to this form should be approved by the Engineer and Dubai South prior to use by the contractor.

DUBAI SOUTH	AL BURJ Engineering Consultants	LOOTAH ENGINEERING AND CONSTRUCTION	DESIGN & BUILD OF THE NOLUS	MATERIAL SUBMITTAL FORM	
				Reference No.	BP159-LEC-MAT-CIV-000017
				Rev. No.	0
Originator of Submittal	Lootah Engineering and Construction LLC		RFP 159/BP/21 in Bussines Park of Dubai South	Date	14 November 2021

Item	Description	Discipline		List of Enclosure
Specifications Reference		(Tick as Applicable)		
		☐	Infrastructure	■ Prequalification Documents
BOQ Reference		☐	Architectural	■ Trade License
		☐	Structural	■ Vendor's Technical Literature
Drawing Reference	BP159-LEC-DWG-ARC-000061	☐	Mechanical	■ List of Previous Projects Done
Material Specified	Material Submittal & Sampel of Metal Acoustic Ceiling (60cmX60cm) and Exposed Ceiling System with Rockwool Insulation	☐	Electrical	☐ Compliance Statement Sheet (*)
		☐	HVAC	☐ Method Statement
Material Proposed	Metal Acoustic Ceiling (60cmX60cm) and Exposed Ceiling System with Rockwool Insulation	☐	Plumbing	■ Previous Test Results
	with Accessories	☐	Finishes	☐ Copy of the Related Specifications
Manufacturer/Supplier	Multicore Technical Services LLC	☐	External Works	■ Sample with Sample Tag(**)
Address of Manufacturer	P.O. Box 717407, Al Dubai, U.A.E	■	Civil Works	☐ Shop Drawings (if applicable)
Contractor Remarks		☐	Landscaping	☐ Others (specify)
Date Required on Site				
Expected Date of Arrival of Material on Site:		Expected Date of Material Submittal Documents to RE:		

Notes:

*Compliance statement sheet covering each paragraph and subparagraph of the specification and deviations should be clearly marked.
Advantages/disadvantages betweent the specified and proposed to be mentioned. This statement must be attached to the relevant submittal form.
**Samples should be presented on a sample board suitably identified with labels. Where it is not possible to present a sample on sample board due to size constraints, sample tag should be attached properly. Photos of samples should be be included in the submittal.
All document submissions should be include one Original along with a soft copy in PDF Format with this submission.
When a resubmission is made based on The Engineer's comments, the compliance/reply to each comment should be clearly mentioned point by point. The specified format should be filled in accordinly and attached to the submittal form.

Contractor Statement: ***We certify that the material specified herewith has been reviewed in detail and is in compliance with the contract drawings and specifications except as otherwise stated above.***

Contractor's Authorized Representative Name	Arunkumar Construction Manager	Signature and Stamp

ENGINEER'S COMMENTS

Incoming Ref. No. , if applicable (to be filled by RE)

Metal tile 60x60 false ceiling for BOH (Kitchen) is acceptable subject to following:

1.) Subject to comply with project, specifications, green building and authorities regulations and requirements.

2.) Plane / washable / acoustic metal tile not perforated is required.

3.) Shadow gap (angle) shall be used for fixation with walls.

4.) Final approval subject to submit false ceiling shop drawings and approval.

5.) This approval not relieve Contractor from his liability.

Continued on next page…

ENGINEER'S APPROVAL STATUS	☐ Code 1	☐ Code 2	☐ Code 3	☐ Code 4	☐ For Information Only
RE Technical Team Review Name and Position					Signature, Date and Stamp
Engineer's Authorized Representative Name	Qussay Al Asaad 17.11.2021				Signature, Date and Stamp

DUBAI SOUTH COMMENTS (To be filled up by DS Development Management Department)

DUBAI SOUTH APPROVAL STATUS	☐ Code 1	☐ Code 2	☐ Code 3	☐ Code 4	☐ For Information Only
Technical Team (Development Management) Reviewer Name and Position					Signature and Date
Design Manager Name					Signature and Date
Project Manager Name					Signature and Date
Outgoing Ref. No., if applicable (to be filled by RE)					

CONTRACTOR RECEIVED SIGNATURE			
Date		Signature and Stamp	

DOCUMENT STATUS
Code 1 - Approved.
Code 2 - Approved as noted, work may proceed subject to incorporation of comments indicated.
Code 3 - Revise & resubmit.
Code 4 - Rejected
Corrections or comments made relative to submittals during this review do not relieve the contractor from compliance with the contract requirments and specfications. This check is only for review of general conformance with the design concept of the project and general compliance with the information given in the contract documents.
Any amendments to this form should be approved by the Engineer and Dubai South prior to use by the contractor.

DUBAI SOUTH	AL BURJ Engineering Consultants	LOOTAH ENGINEERING AND CONSTRUCTION	**DESIGN & BUILD OF THE NOLUS**	**SAMPLE TAG**
			Reference	BP159-LEC-TAG-FNS-000004
Originator of Submittal	Lootah Engineering and Construction LLC	RFP 159/BP/21 in Bussines Park of Dubai South	Rev. No	0
			Date Submitted	14-Nov-21
Requested by	Nahla Taha			

MATERIAL DETAIL

Item Description	Material Sample for FL-02 Tile Flooring (M/s Al Namarek & Ceramic City)
Area of Use	FL-02 Feature Flooring - Dining Area
Contractor Statement	We certify that the material submitted herewith is a specimen of the material which is to be used in the areas described above, and in compliane with the contract drawings and specifications except as otherwise stated in the related Alternative Material Submittal Form. We undertake full responsibility to ensure that the material deliverd at site is the same as the approved sample
Contractor's Authorized Representative Name	**Arunkumar** **Construction Manager**

Signature and Stamp

ENGINEER'S COMMENTS

Date Received by Engineer document controller and signature		**Incoming Ref. No.**	

Approved As Noted:

1.) Approved is (Option 1)

2.) Subject to comply with project, specification and authorities regulations and requirements.

3.) Shop drawings for Tiles works (Wall and Floor) should be submitted.

4.) This approval will not relieve Contractor from his liability.

APPROVAL STATUS	☐ Code 1	☐ Code 2	☐ Code 3	☐ Code 4	☐ For Information Only
Engineer's Authorized Representative Name	Qussay Al Asaad 18.11.2021			Signature, Date and Stamp	

DUBAI SOUTH COMMENTS (To be filled up by DS Development Management Department)	
Date Received by DS document controller and signature	

- IN PRINCIPAL OPTION 1 PRESENTED BY CONTRACTOR IS ACCEPTABLE
- OUT OF 8 MOTTIFS , 4 MOTTIFS ARE PROVIDED
- CONTRACTOR TO CHECK IF OTHER 4 MOTTIFFS ARE AVAILAIBLE IN SAME PRODUCT RANGE
- CONTRACTOR TO MAKE SURE ALL 8 - MOTTIFS ARE USED IN THE DESIGN
- CONTRACTOR TO PROVIDE SHOP DRAWINGS TO SHOW MOTTIF LAYOUT WITH RESPECT TO FLOORING LAYOUT
- SAME TILE IS USED IN JOINERY SKIRTING WHICH NEEDS TO BE CORDINATED ON SHOP DRAWINGS
- SPECIFIED TILE IS 300 X 600 , CONTRACTOR PROPOSED 300 X300 , CONTRACTOR TO CHECK WITH SUPPLIER FOR MISSING MOTTIFS

APPROVAL STATUS	☐ Code 1	☐ Code 2	☐ Code 3	☐ Code 4	☐ For Information Only
Technical Team (Development Management) Reviewer Name and				Signature and Date	
Design Manager Name				Signature and Date	
Project Manager Name				Signature and Date	
Outgoing Ref. No. (by RE)					

CONTRACTOR RECEIVED SIGNATURE			
Date		Signature and Stamp	

DOCUMENT STATUS
Code 1 - Approved.
Code 2 - Approved as noted, work may proceed subject to incorporation of comments indicated.
Code 3 - Revise & resubmit.
Code 4 - Rejected
Corrections or comments made relative to submittals during this review do not relieve the contractor from compliance with the contract requirments and specfications. This check is only for review of general conformance with the design concept of the project and general compliance with the information given in the contract documents.
Any amendments to this form should be approved by the Engineer and Dubai South prior to use by the contractor.

DUBAI SOUTH	AL BURJ Engineering Consultants	LOOTAH ENGINEERING AND CONSTRUCTION	**DESIGN & BUILD OF THE NOLUS**	**SAMPLE TAG**	
				Reference No.	BP159-LEC-TAG-FNS-000029
Originator of Submittal	**Lootah Engineering and Construction LLC**		**RFP 159/BP/21 in Bussines Park of Dubai South**	Rev. No	0
				Date Submitted	10-Jan-22
Requested by	**Omar Soliman**				

MATERIAL DETAIL

Item Description	**Material Sample for MR MDF & HDF**
	Item: MR MDF & HDF Thicknes: 18mm Colour: Paint Finish (Colour to mach pa.01 wall panitn)
Area of Use	FHRC & SMDB
Contractor Statement	We certify that the material submitted herewith is a specimen of the material which is to be used in the areas described above, and in compliane with the contract drawings and specifications except as otherwise stated in the related Alternative Material Submittal Form. We undertake full responsibility to ensure that the material deliverd at site is the same as the approved sample.
Contractor's Authorized Representative Name	**Omar Soliman** **Technical Manager**
	Signature and Stamp

ENGINEER'S COMMENTS

Date Received by Engineer document controller and signature		**Incoming Ref. No.**	

- No Objection subject to compliance with project specifications and outhority regulations and requirements.

- Subject to no cost and time impact.
- This approval not relieve Contractor from his liability.

APPROVAL STATUS	☐ Code 1	☐ Code 2	☐ Code 3	☐ Code 4	☐ For Information Only
Engineer's Authorized Representative Name	Qussay Al Asaad 11.01.2022			Signature, Date and Stamp	

DUBAI SOUTH COMMENTS (To be filled up by DS Development Management Department)	
Date Received by DS document controller and signature	
Follow engineers comments	

APPROVAL STATUS	☐ Code 1	☐ Code 2	☐ Code 3	☐ Code 4	☐ For Information Only
Technical Team (Development Management) Reviewer Name and	Jaspinder Kaur			Signature and Date	
Design Manager Name				Signature and Date	
Project Manager Name				Signature and Date	
Outgoing Ref. No. (by RE)					

CONTRACTOR RECEIVED SIGNATURE			
Date		Signature and Stamp	

DOCUMENT STATUS
Code 1 - Approved.
Code 2 - Approved as noted, work may proceed subject to incorporation of comments indicated.
Code 3 - Revise & resubmit.
Code 4 - Rejected
Corrections or comments made relative to submittals during this review do not relieve the contractor from compliance with the contract requirments and specfications. This check is only for review of general conformance with the design concept of the project and general compliance with the information given in the contract documents.
Any amendments to this form should be approved by the Engineer and Dubai South prior to use by the contractor.

DUBAI SOUTH	AL BURJ Engineering Consultants	LOOTAH ENGINEERING AND CONSTRUCTION	**DESIGN & BUILD OF THE NOLUS**	**SAMPLE TAG**	
				Reference No.	BP159-LEC-TAG-FNS-000011
Originator of Submittal	**Lootah Engineering and Construction LLC**		**RFP 159/BP/21 in Bussines Park of Dubai South**	Rev. No	0
				Date Submitted	30-Nov-21
Requested by	**Omar Soliman**				

MATERIAL DETAIL

Item Description	**Material Sample for FL.03 Tile Flooring** Item Description: Tile Flooring Code: Custom Type: Smashed RAK Tiles Size: 600X600X9mm THK Supplier: M/s Revoren Manufecture: M/s RAK
Area of Use	Feature Flooring - Dining Area
Contractor Statement	We certify that the material submitted herewith is a specimen of the material which is to be used in the areas described above, and in compliane with the contract drawings and specifications except as otherwise stated in the related Alternative Material Submittal Form. We undertake full responsibility to ensure that the material deliverd at site is the same as the approved sample
Contractor's Authorized Representative Name	**Omar Soliman** **Technical Manager**
	Signature and Stamp

ENGINEER'S COMMENTS

Date Received by Engineer document controller and signature		**Incoming Ref. No.**	

No Objection subject to provide Mock-up for final approval.

APPROVAL STATUS	☐ Code 1	☐ Code 2	☐ Code 3	☐ Code 4	☐ For Information Only
Engineer's Authorized Representative Name	Qussay Al Asaad 30.11.2021				Signature, Date and Stamp

DUBAI SOUTH COMMENTS (To be filled up by DS Development Management Department)	
Date Received by DS document controller and signature	
Mokup for tile fixing to be presented prior to installation	
No objection for color	
The pattern of tiles to be abstract as per reference image	
Method to be smashed tiles	

APPROVAL STATUS	☐ Code 1	☐ Code 2	☐ Code 3	☐ Code 4	☐ For Information Only
Technical Team (Development Management) Reviewer Name and					Signature and Date
Design Manager Name					Signature and Date
Project Manager Name					Signature and Date
				Outgoing Ref. No. (by RE)	

CONTRACTOR RECEIVED SIGNATURE			
Date		Signature and Stamp	

DOCUMENT STATUS
Code 1 - Approved.
Code 2 - Approved as noted, work may proceed subject to incorporation of comments indicated.
Code 3 - Revise & resubmit.
Code 4 - Rejected
Corrections or comments made relative to submittals during this review do not relieve the contractor from compliance with the contract requirments and specfications. This check is only for review of general conformance with the design concept of the project and general compliance with the information given in the contract documents.
Any amendments to this form should be approved by the Engineer and Dubai South prior to use by the contractor.

Thank You

REVOREN